Installation and service instructions

for contractors

Vitodens 200-W
Type B2HA, 125 and 150 kW
Wall mounted gas condensing boiler
Natural gas and LPG version

For applicability, see the last page

VITODENS 200-W

5623 520 GB 6/2012

Please keep safe.

Safety instructions

Please follow these safety instructions closely to prevent accidents and material losses.

Safety instructions explained

Danger
This symbol warns against the risk of injury.

Please note
This symbol warns against the risk of material losses and environmental pollution.

Note
Details identified by the word "Note" contain additional information.

Target group

These instructions are exclusively designed for qualified personnel.
- Work on gas equipment must only be carried out by a qualified gas fitter.
- Work on electrical equipment must only be carried out by a qualified electrician.
- The system must be commissioned by the system installer or a qualified person authorised by the installer.

Regulations

Observe the following when working on this system
- all legal instructions regarding the prevention of accidents,
- all legal instructions regarding environmental protection,
- the Code of Practice of relevant trade associations,
- all current safety regulations as defined by DIN, EN, DVGW, TRGI, TRF, VDE and all locally applicable standards,
- Gas Safety (Installation & Use) Regulations
  - the appropriate Building Regulation either the Building regulations, the Building Regulation (Scotland), Building Regulations (Northern Ireland),
  - the Water Fittings Regulation or Water Bylaws in Scotland,
  - the current I.E.E. Wiring Regulations.

If you smell gas

Danger
Escaping gas can lead to explosions which may result in serious injury.
- Never smoke. Prevent naked flames and sparks. Never switch lights or electrical appliances ON or OFF.
- Close the gas shut-off valve.
- Open windows and doors.
- Remove all people from the danger zone.
- Notify your gas or electricity supplier from outside the building.
- Shut off the electricity supply to the building from a safe place (outside the building).

Safety instructions (cont.)

If you smell flue gas

Danger
Flue gas can lead to life-threatening poisoning.
- Shut down the heating system.
- Ventilate the boiler room.
- Close all doors leading to the living space.

Working on the system

- When using gas as fuel, also close the main gas shut-off valve and safeguard against unauthorised reopening.
- Isolate the system from the power supply and check that it is no longer 'live', e.g. by removing a separate fuse or by means of a main isolator.
- Safeguard the system against unauthorised reconnection.

Please note
Electronic modules can be damaged by electro-static discharges.
Touch earthed objects, such as heating or water pipes, to discharge static loads.

Repair work

Please note
Repairing components which fulfil a safety function can compromise the safe operation of your heating system.
Replace faulty components only with original Viessmann spare parts.

Ancillary components, spare and wearing parts

Please note
Spare and wearing parts which have not been tested together with the heating system can compromise its function. Installing non-authorised components and non-approved modifications/conversion can compromise safety and may invalidate our warranty. For replacements, use only original spare parts from Viessmann or those which are approved by Viessmann.

Index

Installation instructions

Preparing for installation

Installation sequence

Service instructions

Commissioning, inspection, maintenance

Code 1

Code 2

Diagnosis and service scans

5623 520 GB

Index (cont.)

Product information

Vitodens 200-W, B2HA

Preset for operation with natural gas E and LL.
For conversion to LPG P (without conversion kit), see page 37.

Conversion for other countries
The Vitodens 200-W should generally only be delivered to those countries specified on the type plate. For deliveries to alternative countries, an approved contractor, on his own initiative, must arrange individual approval in accordance with the law of the land.

Multi boiler system
In connection with the installation of a multi boiler system observe the installation instructions of the multi boiler system accessories.

Preparing for installation

Dimensions and connections

! **Please note**
To prevent equipment damage, install all pipework free of load and torque stresses.

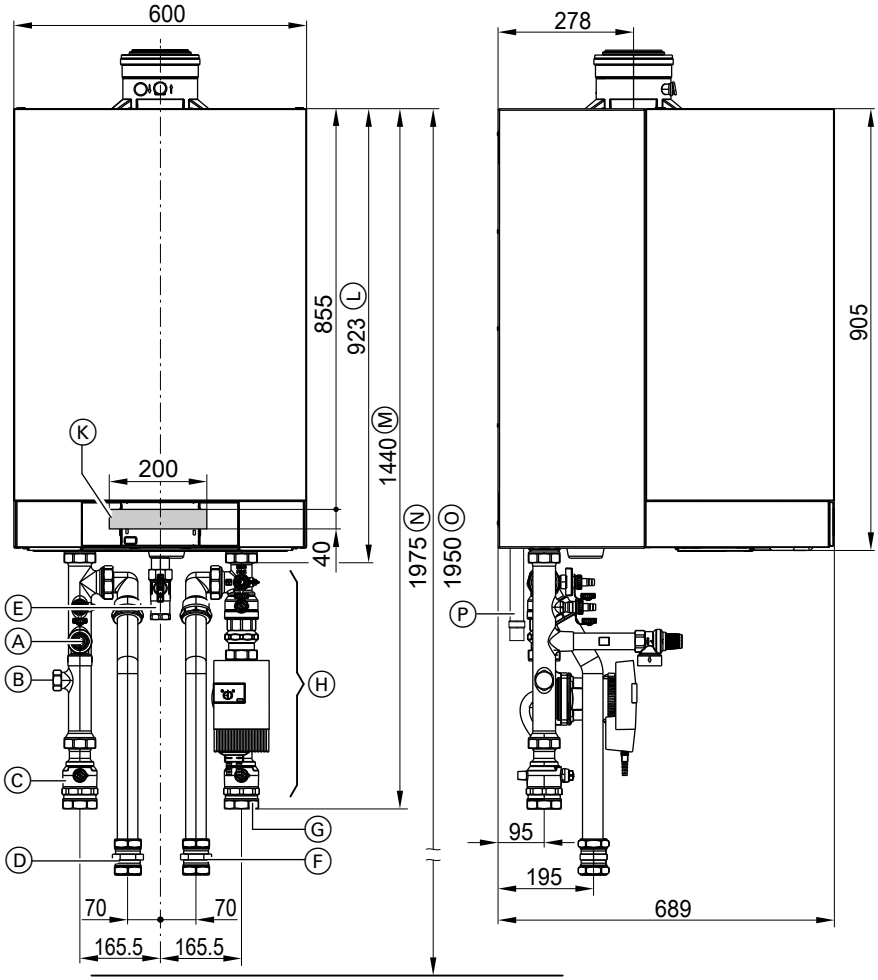

Ⓐ Safety valve
Ⓑ Expansion vessel connection G1
Ⓒ Boiler flow ∅ 54 mm
Ⓓ Cylinder flow ∅ 42 mm
Ⓔ Gas connection R 1
Ⓕ Cylinder return ∅ 42 mm

5623 520 GB

Preparing for installation (cont.)

Ⓖ Boiler return ∅ 54 mm
Ⓗ Connection sets (accessories, shown without the thermal insulation supplied)
Ⓚ Cable entry area at the back
Ⓛ Without connection set (accessories)
Ⓜ With connection set (accessories)
Ⓝ Recommended dimension (single boiler system without mounting frame)
Ⓞ Recommended dimension (multi boiler system and single boiler system with mounting frame)
Ⓟ Condensate drain

Preparing for the boiler installation

Note
This boiler (protection IP X4 D) is approved for installation in wet rooms inside safety zone 1 according to DIN VDE 0100 [Germany], if hosed water can be prevented.
Observe DIN VDE 0100 [or local regulations].

1. Prepare the water connections. Thoroughly flush the heating system.

2. Prepare gas connection to TRGI [or local regulations].

3. Prepare the electrical connections.
   - Power cable: NYM-J 3 x 1.5 mm^2, max. fuse 16 A, 230 V~.
   - Accessory cables: NYM with the required number of conductors for the external connections.
   - Allow all cables in area "Ⓚ" to protrude 1400 mm from the wall.

Fitting the boiler and making connections

Removing boiler from packaging and levelling

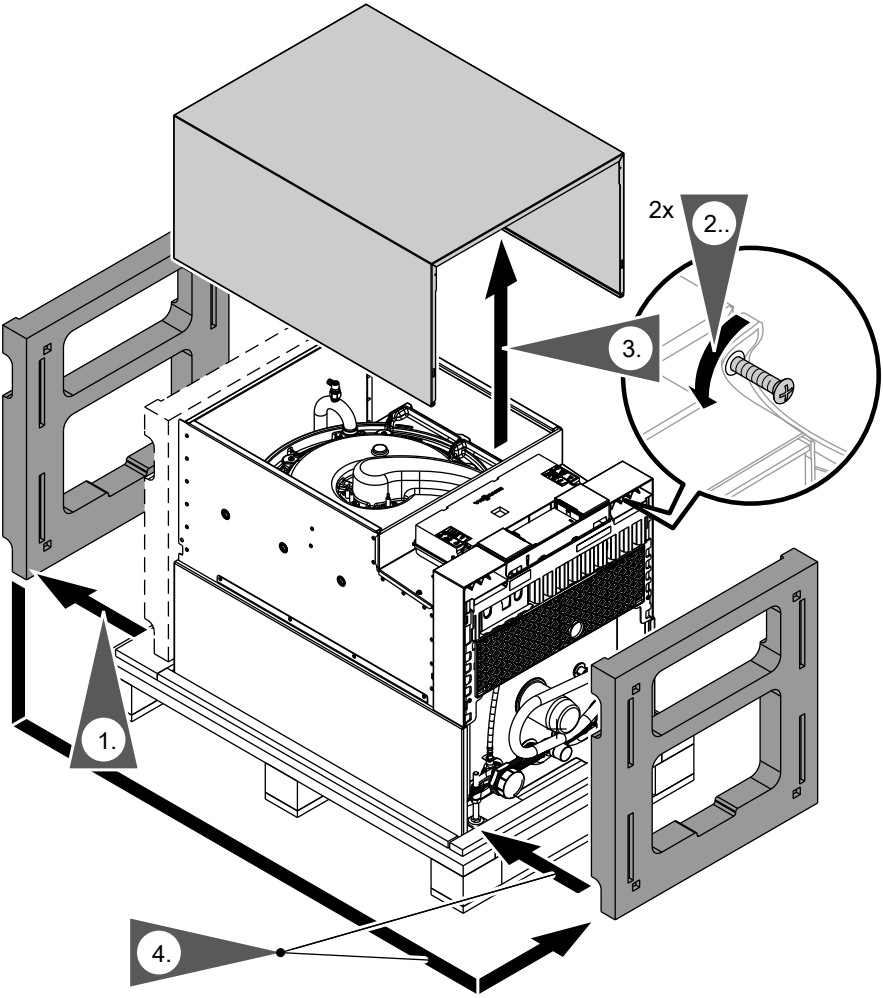

1. Remove packing cushions and keep them safe.
   They are used as a support during levelling.
2. Undo two screws on the underside.
3. Remove front panel.
4. Push packing cushions onto the underside of the boiler.

Fitting the boiler and making connections (cont.)

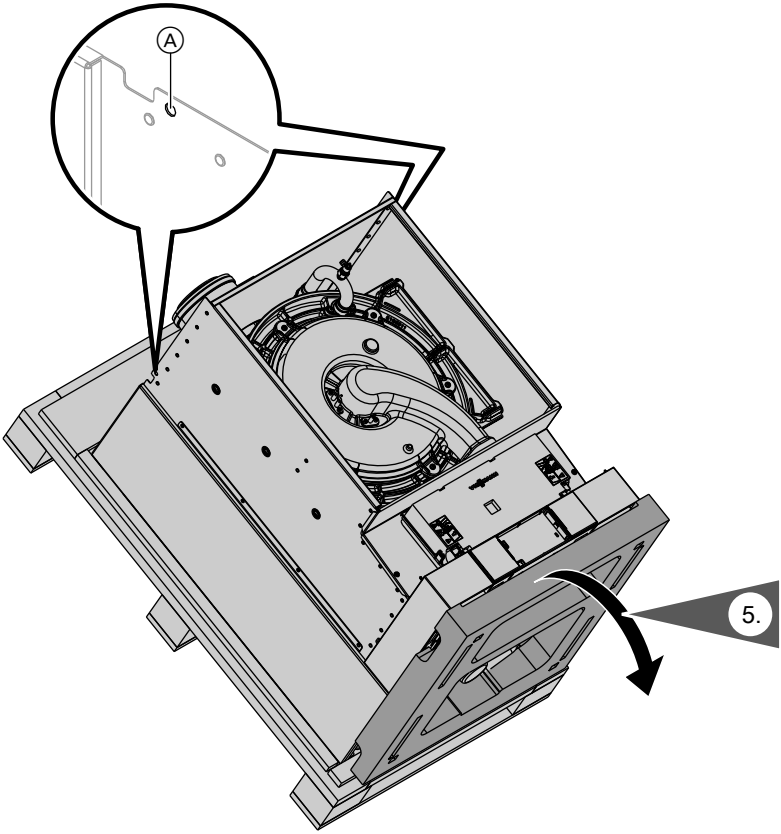

Ⓐ ∅ 9 mm drilled holes for attaching lifting gear

5. ! **Please note**
To prevent damage, do not level boiler without packing cushions.

Level boiler with pallet.

Fitting the boiler and making connections (cont.)

Fitting the wall mounting bracket

Note
The enclosed screws and rawl plugs are only suitable for concrete. For other construction materials, use fixings that are suitable for 145 kg loads.

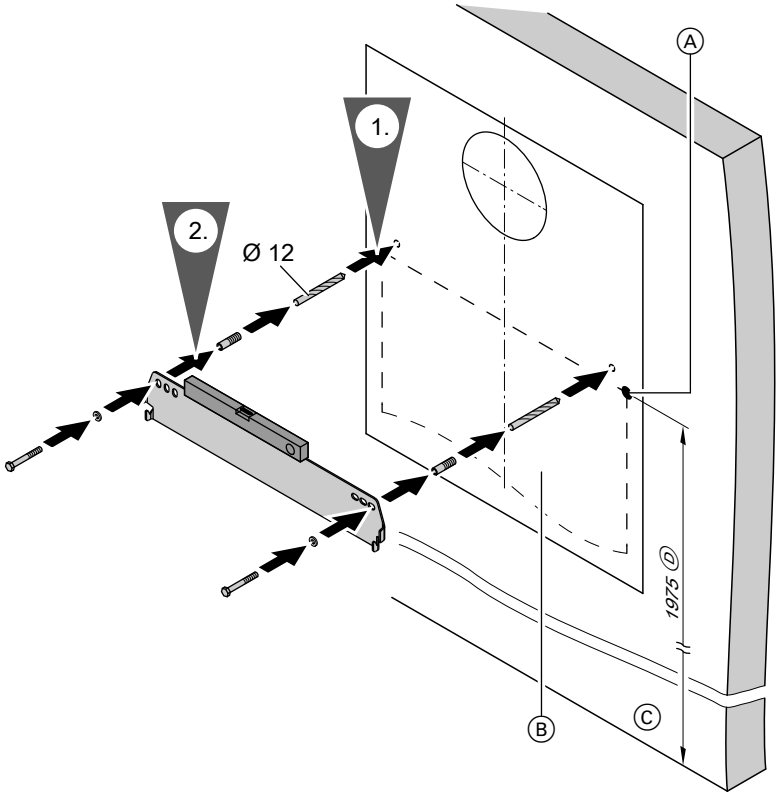

Ⓐ Reference point: boiler top edge
Ⓑ Installation template (included with the boiler)
Ⓒ Top edge finished floor
Ⓓ Recommendation

Fitting the boiler and making connections (cont.)

Hooking the boiler into the wall mounting bracket and levelling it

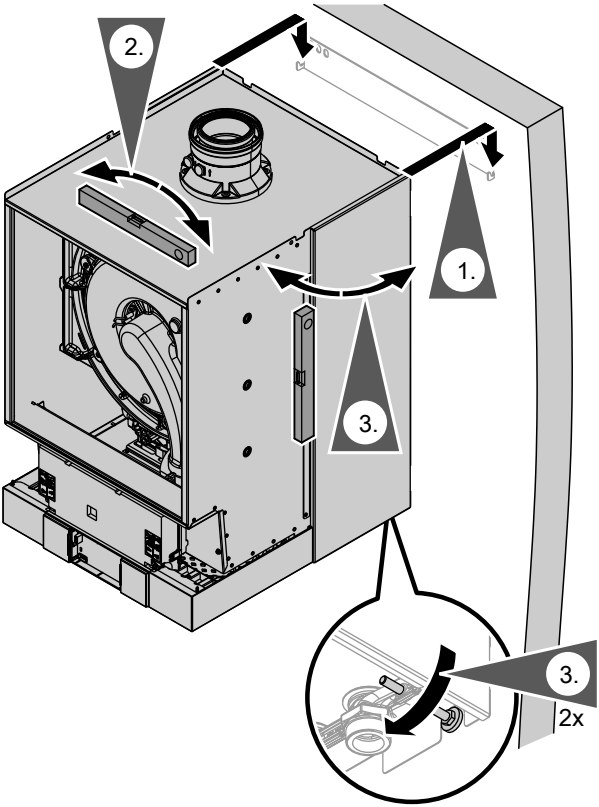

Heating water side connection

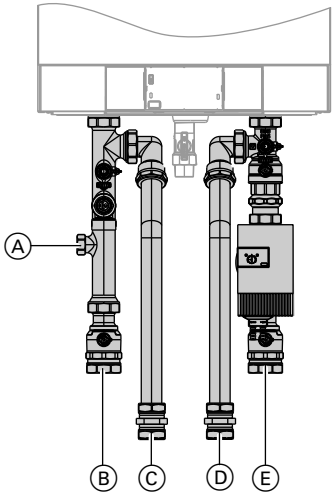

Ⓐ Expansion vessel connection
Ⓑ Boiler flow
Ⓒ Cylinder flow
Ⓓ Cylinder return
Ⓔ Boiler return

Note
Residual water may escape when undoing the locking caps.

Flue gas connection

Note
The labels "System certificate" and "Skoberne GmbH flue system" enclosed with the technical documentation may only be used in conjunction with the Viessmann flue system made by Skoberne.

Flue gas connection (cont.)

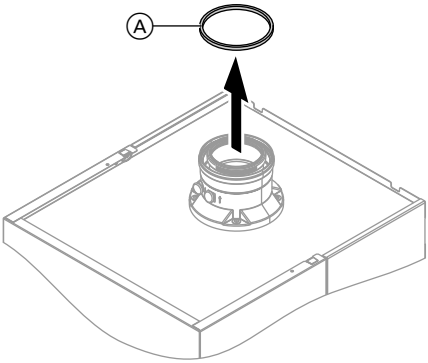

1. Only for **open** flue operation: Remove outer gasket Ⓐ (ventilation air).
2. Connect flue pipe or flue ventilation air pipe.

Flue system installation instructions.

Condensate connection

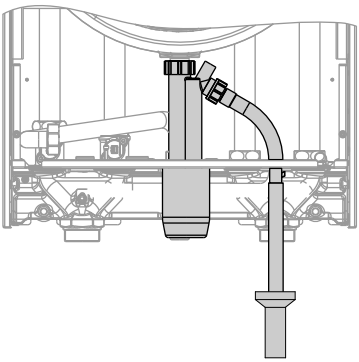

Connect the condensate hose with a constant fall and a pipe vent to the public sewage system or to a neutralising system.

Gas connection

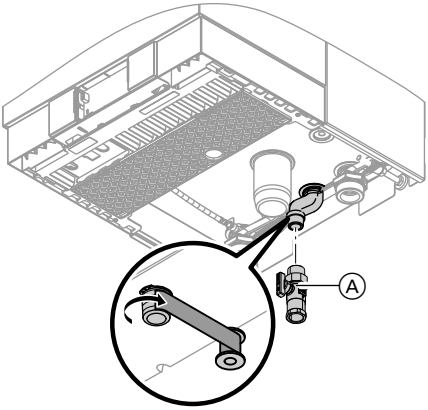

Information on operation with LPG
We recommend the installation of an external safety solenoid valve when installing the boiler in rooms below ground level.

1. Seal in gas shut-off valve Ⓐ into the gas supply pipe.
2. Carry out a tightness test.

   Note
   Only use suitable and approved leak detecting agents (EN 14291) and devices for the tightness test. Leak detection agents with unsuitable constituents (e.g. nitrites, sulphides) can cause material damage.
   Remove residues of the leak detection agent after testing.

   ! **Please note**
   Excessive test pressure may damage the boiler and the gas valve.
   Max. test pressure 150 mbar. Where higher pressure is required for tightness tests, disconnect the boiler and the gas valves from the gas supply pipe (undo the fitting).

3. Vent the gas line.

Conversion to other gas types: Service instructions

Opening the control unit casing

! **Please note**
Electronic assemblies can be damaged by electrostatic discharge.
Before beginning work, touch earthed objects, such as heating or water pipes, to discharge static loads.

Opening the control unit casing (cont.)

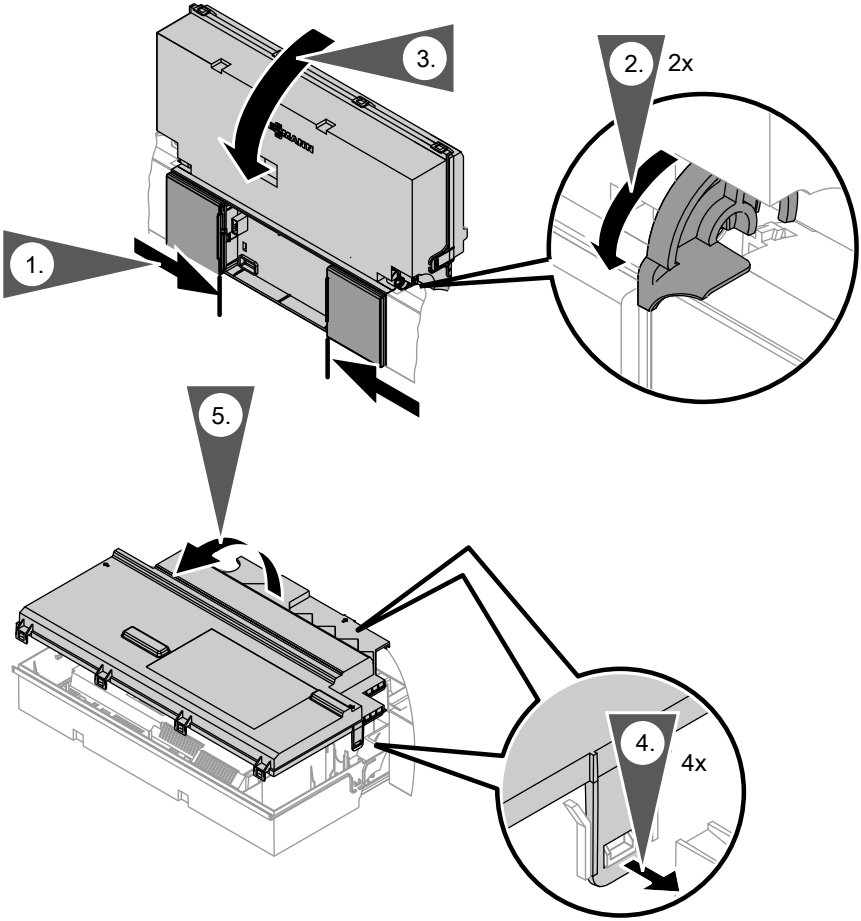

5623 520 GB

Electrical connections

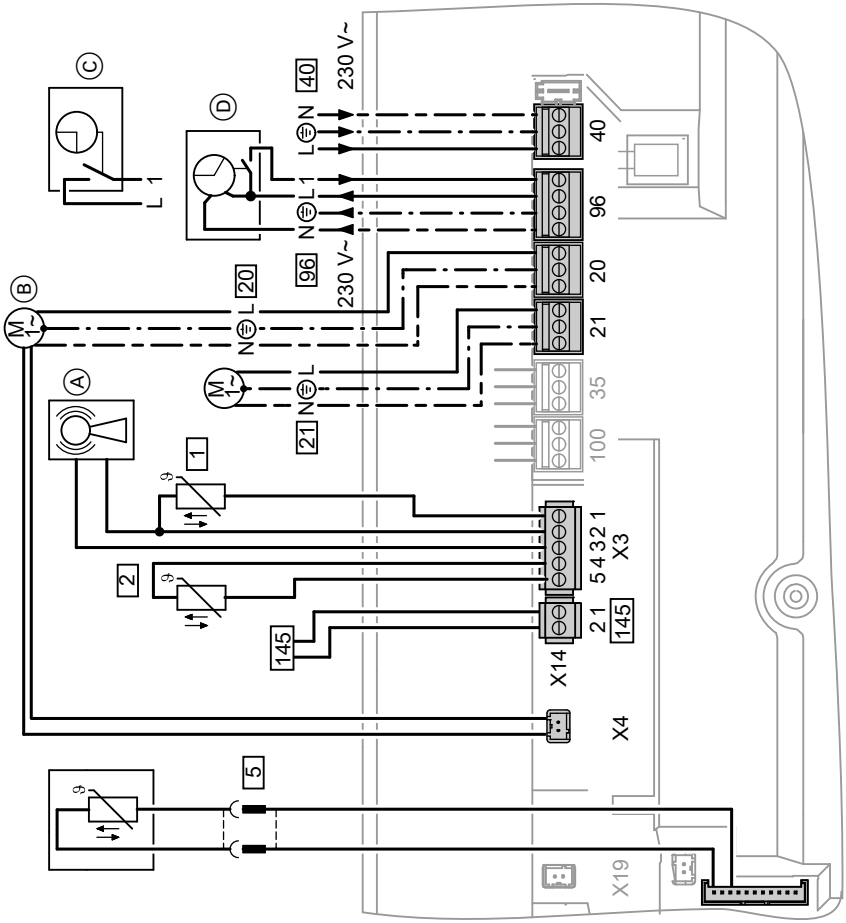

Ⓐ Radio clock receiver
Ⓑ Heating circuit pump or boiler circuit pump
Ⓒ Vitotrol 100 UTDB (only for constant temperature control)
When making this connection, remove jumper between "1" and "L".

Ⓓ Vitotrol 100 UTA (only for constant temperature control)
or
Vitotrol 100 UTDB-RF radio clock receiver
When making this connection, remove jumper between "1" and "L".

Electrical connections (cont.)

Connections at plug 230 V~

[20] Boiler circuit pump or heating circuit pump, variable speed with 0 - 10 V connection

[21] Circulation pump, optional connection:
- DHW circulation pump
- External heating circuit pump
- Circulation pump for cylinder heating

[40] Power supply

[96]
- Power supply for accessories
- External demand/blocking
- Vitotrol 100 UTA
- Vitotrol 100 UTDB
- Vitotrol 100 UTDB-RF

Connections at LV plug

[1] Outside temperature sensor

[2] Flow temperature sensor for low loss header (accessories)

[5] Cylinder temperature sensor (part of the DHW cylinder connection set)

[145] KM BUS subscriber (accessory)
- Vitotrol 200A or 300A remote control
- Vitocom 100
- Extension kit for one heating circuit with mixer
- Solar control module, type SM1
- Vitosolic
- Extension AM1
- Extension EA1
- Wireless base station

Information on connecting accessories
When connecting accessories observe the separate installation instructions provided with them.

Circulation pump at plug [20]:

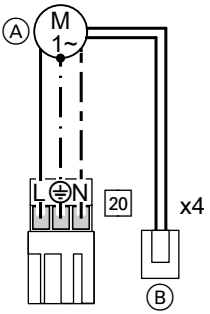

Rated current	2(1) A~
Rated voltage	230 V~

(A) Circulation pump

(B) Only with variable speed heating circuit pump:
Plug in 0 - 10 V connection at X4.

Electrical connections (cont.)

Circulation pump at plug 21:

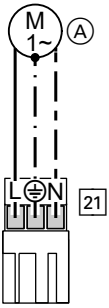

Ⓐ Circulation pump

Rated current	2(1) A~
Rated voltage	230 V~

Set function of connected component in coding address "39"

Function	Code
DHW circulation pump	39:0
Heating circuit pump for heating circuit without mixer A1	39:1
Circulation pump for cylinder heating (delivered condition)	39:2

External demand via switching contact

Connection options:
- Extension EA1 (accessory, see separate installation instructions).
- Plug 96.

Connection

! **Please note**
'Live' contacts lead to short circuits or phase failure.
The external connection **must be floating**.

Electrical connections (cont.)

Plug 96	Extension EA1
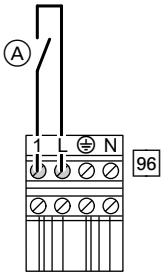 Ⓐ Floating contact When making this connection, remove jumper between 1 and L.	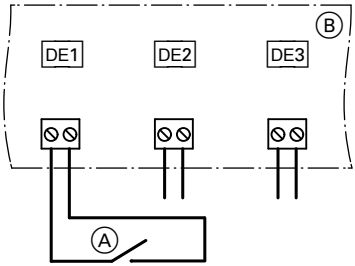 Ⓐ Floating contact Ⓑ Extension EA1

Burner operation is load-dependent if the contact is closed. The boiler water is heated to the value set in coding address "9b" in group **"General"/"1"**. The boiler water temperature is limited by this set value and the electronic maximum limit (coding address "06" in group **"Boiler"/"2"**).

Codes

Plug 96	Extension EA1
"4b:1" in group **"General"/"1"**	Set "3A" (DE1), "3b" (DE2) or "3C" (DE3) in group **"General"/"1"** to 2.

- Select effect of the function on the relevant heating circuit pump in coding address "d7" in group **"Heating circuit"/"5"**.
- Select effect of the function on the circulation pump for cylinder heating in coding address "5F" in group **"DHW"/"3"**.

External demand via 0 – 10 V input

Connection at 0 – 10 V input to **extension EA1**.
Ensure DC separation between the earth conductor and the negative pole of the on-site voltage source.

Electrical connections (cont.)

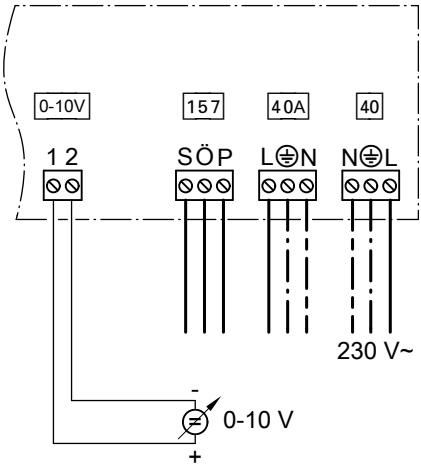

0 – 1 V ≙ no default set boiler water temperature
1 V ≙ Set value 10 °C
10 V ≙ Set value 100 °C

External blocking via switching contact

Connection options:
- Plug 96.
- Extension EA1 (accessory, see separate installation instructions).

! **Please note**
'Live' contacts lead to short circuits or phase failure.
The external connection **must be floating**.

Electrical connections (cont.)

Plug 96	Extension EA1
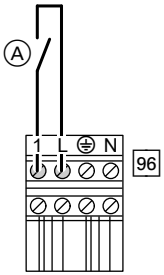	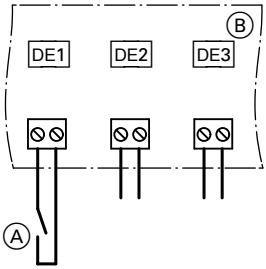
Ⓐ Floating contact When making this connection, remove jumper between 1 and L.	Ⓐ Floating contact Ⓑ Extension EA1

The burner is switched off if this contact is closed. The heating circuit pump and circulation pump for cylinder heating are switched according to the set code (see the following table "Codes").

! **Please note**
When blocked, there is **no frost protection** for the heating system.

Codes

Plug 96	Extension EA1
"4b:2" in group **"General"/"1"**	Set "3A" (DE1), "3b" (DE2) or "3C" (DE3) in group **"General"/"1"** to 3 or 4.

- Select effect of the function on the heating circuit pump in coding address "d6" in group **"Heating circuit"/"5"**.
- Select effect of the function on the circulation pump for cylinder heating in coding address "5E" in group **"DHW"/"3"**.

Outside temperature sensor 1

Fitting outside temperature sensor RF (wireless accessory):

Wireless base station

5623 520 GB

Electrical connections (cont.)

Fitting location for outside temperature sensor

- North or north-westerly wall, 2 to 2.5 m above ground level; in multi storey buildings, in the top half of the second floor
- Not above windows, doors or vents
- Not immediately below balconies or gutters
- Never render over

Outside temperature sensor connection

2-core lead, length up to 35 m with a cross-section of 1.5 mm^2

Power supply for accessories at plug 96

230 V~
Where the boiler is installed in a wet area, the connection of accessories to the power supply must not be carried out at the control unit. The power supply connection for accessories can be made immediately at the control unit, if the boiler is installed outside wet areas. This connection is switched directly with the ON/OFF switch of the control unit.

If the total system current exceeds 6 A, connect one or more extensions via an ON/OFF switch directly to the mains supply (see next chapter).

Electrical connections (cont.)

Connection of accessories

Power supply of all accessories via the boiler control unit

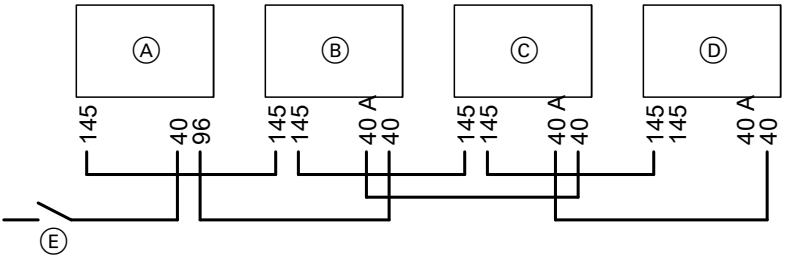

Some accessories with direct power supply

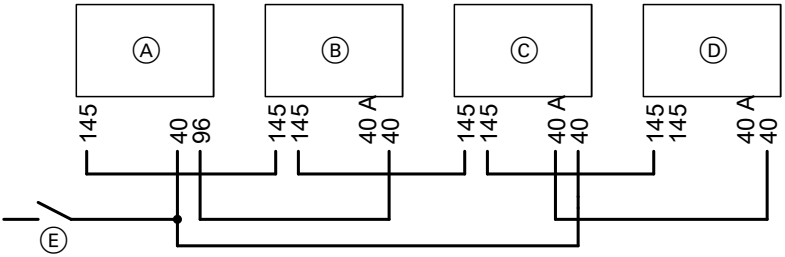

Ⓐ Boiler control unit
Ⓑ Extension kit for heating circuit with mixer M2
Ⓒ Extension kit for heating circuit with mixer M3
Ⓓ Extension AM1, EA1 and/or solar control module, type SM1
Ⓔ ON/OFF switch

If the current flowing to the connected working parts (e.g. circulation pumps) is higher than the safety level of the accessory, the output concerned should only be used to control an on-site relay.

Accessories	Internal fuse protection
Extension kit for heating circuit with mixer	2 A
Extension AM1	4 A
Extension EA1	2 A
Solar control module, type SM1	2 A

5623 520 GB

Electrical connections (cont.)

Power supply 40

Danger
Incorrect core allocation can result in serious injury and damage to the appliance.
Take care not to interchange wires "L1" and "N".

- Install an isolator in the power cable which simultaneously separates all non-earthed conductors from the mains with contact separation of at least 3 mm.
  Furthermore, we recommend installing an AC/DC-sensitive RCD (RCD class B) for DC (fault) currents that can occur with energy efficient equipment.
- Max. fuse rating 16 A.

Electrical connections (cont.)

Routing the connecting cables

! **Please note**
If connecting cables touch hot components they will be damaged.
When routing and securing connecting cables on site, ensure that the maximum permissible temperatures for these cables are not exceeded.

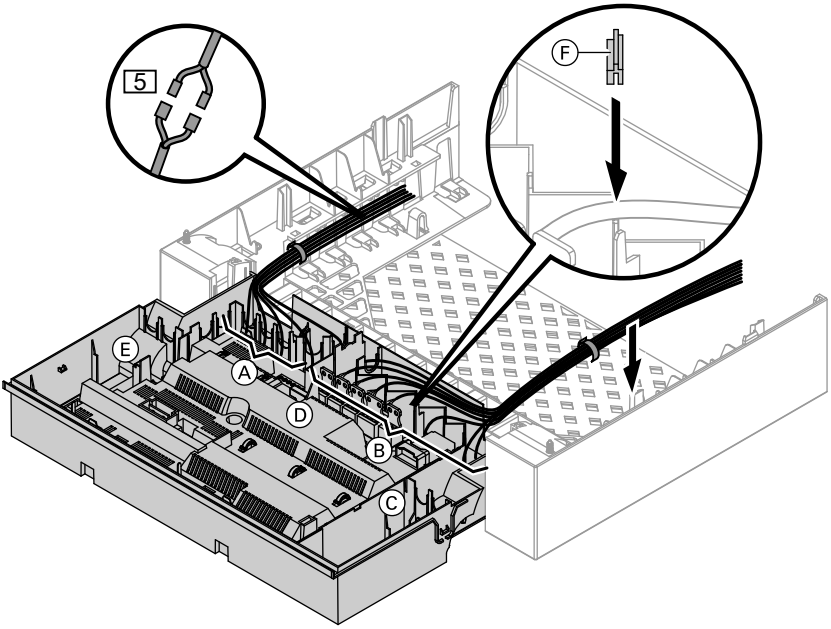

Ⓐ Low voltage connections
Ⓑ 230 V connections
Ⓒ Internal extension
Ⓓ Main PCB
Ⓔ Communication module

Ⓕ Cable grommet for power cable
5 Plugs for connecting the cylinder temperature sensor to the cable harness

Remove the existing cable grommet when using larger cross-sections (up to ∅ 14 mm). Secure the cable with the cable grommet plugged into the lower casing section Ⓕ (black).

Closing the control unit casing and inserting the programming unit

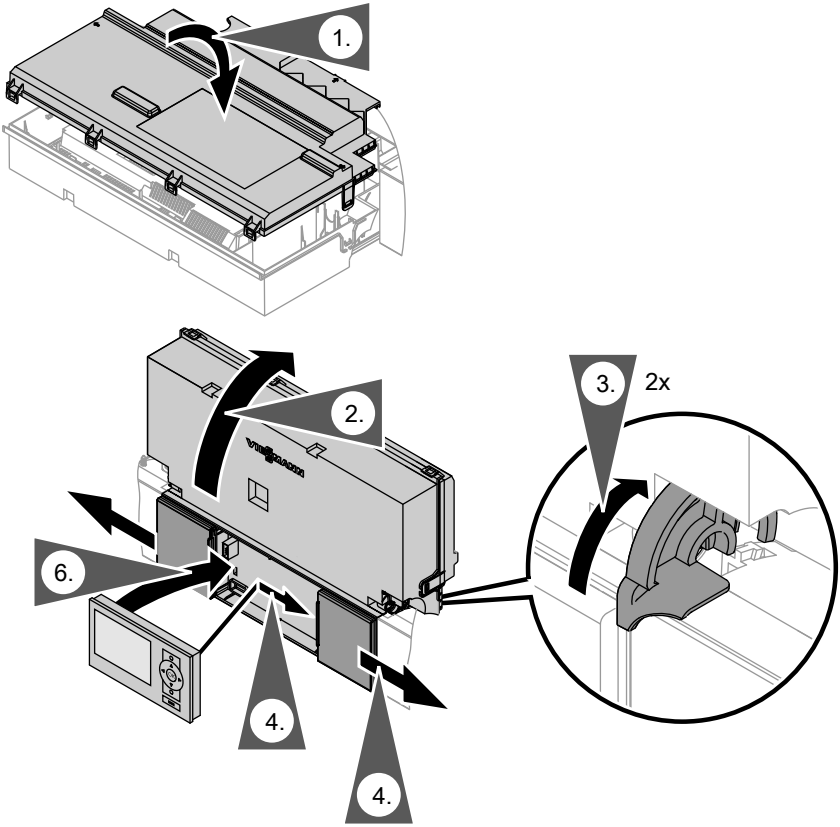

Insert programming unit (packed separately) into the control unit support.

Note
The programming unit can also be housed in a wall mounting base (accessory) near the boiler.

Wall mounting base installation instructions

Steps - commissioning, inspection and maintenance

For further information regarding the individual steps, see the page indicated

Commissioning steps	Inspection steps	Maintenance steps		Page
•	•	•	**1. Opening the boiler**	30
•			**2. Filling the heating system**	31
•			**3. Selecting the language (if necessary) - only for weather-compensated control units**	32
•	•		**4. Setting the time and date (if required) - only for weather-compensated control units**	33
•			**5. Venting the boiler**	34
•			**6. Venting the heating system**	35
•			**7. Filling the siphon with water**	35
•	•	•	**8. Checking all connections on the heating water side and DHW side for leaks**	
•			**9. Checking the power supply**	
•			**10. Designating heating circuits - only for weather-compensated control units**	36
•		•	**11. Checking the gas type**	36
•			**12. Gas type conversion (only for operation with LPG)**	37
•	•	•	**13. Function sequence and possible faults**	37
•	•	•	**14. Checking the static and supply pressure**	39
•			**15. Maximum output setting**	41
•			**16. Checking the balanced flue system for tightness (annular gap check)**	42
	•	•	**17. Removing the burner and checking the burner gasket**	43
	•	•	**18. Checking the burner gauze assembly & replacing if required**	44
	•	•	**19. Checking the flue gas non-return device**	45
	•	•	**20. Checking and adjusting the ignition and ionisation electrodes**	46

5623 520 GB

Steps - commissioning, inspection and… (cont.)

Commissioning steps	Inspection steps	Maintenance steps		Page
	•	•	**21. Cleaning the combustion chamber/heat exchanger and installing the burner**	47
	•	•	**22. Checking the condensate drain and cleaning the siphon**	48
	•	•	**23. Checking the neutralising system (if installed)**	
	•	•	**24. Checking the diaphragm expansion vessel and system pressure**	48
•	•	•	**25. Checking the function of safety valves**	
•	•	•	**26. Checking firm seating of electrical connections**	
•	•	•	**27. Checking all gas equipment for tightness at operating pressure**	49
•	•	•	**28. Checking combustion quality**	49
•	•	•	**29. Checking the flue system for unrestricted flow and tightness**	
•	•	•	**30. Checking the external LPG safety valve (if installed)**	
•			**31. Matching the control unit to the heating system**	51
•			**32. Adjusting the heating curves (only for weather-compensated control units)**	58
•			**33. Connecting the control unit to the LON**	61
		•	**34. Calling up and resetting the "Service" display**	62
•	•	•	**35. Fitting the front panel**	64
•			**36. Instructing the system user**	65

Further details regarding the individual steps

Opening the boiler

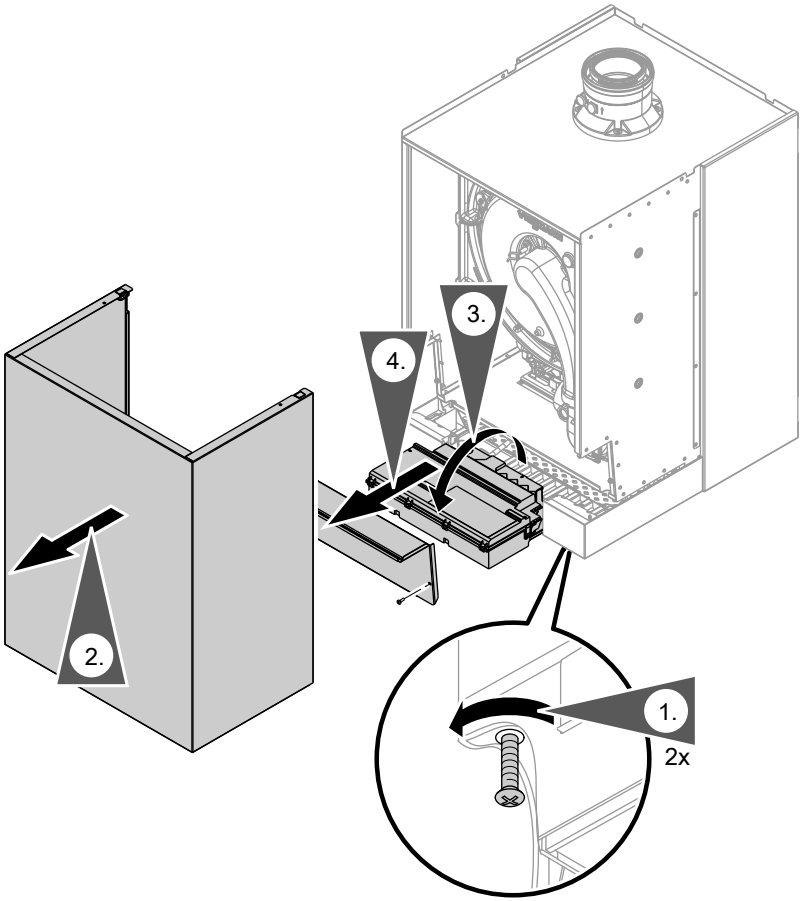

Further details regarding the individual steps (cont.)

Filling the heating system

Fill water

! **Please note**
Unsuitable fill water increases the level of deposits and corrosion and may lead to boiler damage.
- Flush the heating system thoroughly before filling.
- Only use fill water of potable quality.
- An antifreeze additive suitable for heating systems can be added to the fill water. The antifreeze manufacturer must verify its suitability.
- Fill and top-up water with a water hardness in excess of the following values must be softened, e.g. with a small softening system for heating water.

Total permissible hardness of the fill and top-up water

Total heating output	**Specific system volume**		
kW	**< 20 l/kW**	**≥ 20 l/kW to < 50 l/kW**	**≥ 50 l/kW**
≤ 50	≤ 3.0 mol/m^3 (16.8 °dH)	≤ 2.0 mol/m^3 (11.2 °dH)	< 0.02 mol/m^3 (0.11 °dH)
> 50 to ≤ 200	≤ 2.0 mol/m^3 (11.2 °dH)	≤ 1.5 mol/m^3 (8.4 °dH)	< 0.02 mol/m^3 (0.11 °dH)
> 200 to ≤ 600	≤ 1.5 mol/m^3 (8.4 °dH)	≤ 0.02 mol/m^3 (0.11 °dH)	< 0.02 mol/m^3 (0.11 °dH)
> 600	< 0.02 mol/m^3 (0.11 °dH)	< 0.02 mol/m^3 (0.11 °dH)	< 0.02 mol/m^3 (0.11 °dH)

Further details regarding the individual steps (cont.)

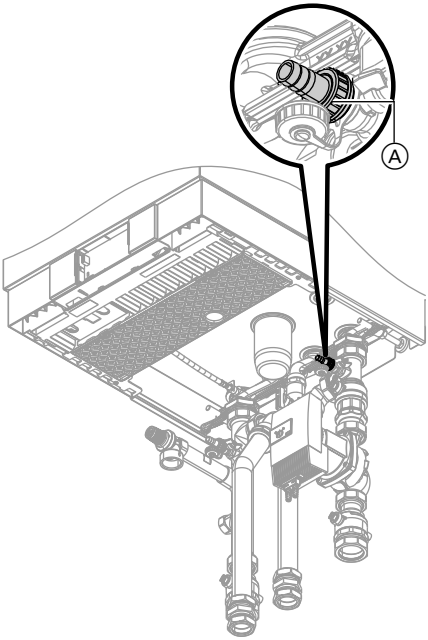

1. Check the pre-charge pressure of the diaphragm expansion vessel.
2. Close the gas shut-off valve.
3. Connect the supply hose to boiler drain & fill valve Ⓐ.
4. Fill the heating system via boiler drain & fill valve Ⓐ. (minimum system pressure > 1.0 bar).
   Permiss. operating pressure: 6 bar.
5. Close boiler drain & fill valve Ⓐ.

Selecting the language (if necessary) - only for weather-compensated control units

At the commissioning stage, the display is in German (factory setting).

Extended menu:

1. ☰
2. **"Settings"**
3. **"Language"**

Sprache	
Deutsch	DE ☑
Cesky	CZ ☐
Dansk	DK ☐
English	GB ☐
Wählen mit ⬍	

4. Set the required language with ▲/▼.

5623 520 GB

Further details regarding the individual steps (cont.)

Setting the time and date (if required) - only for weather-compensated control units

During commissioning, or after prolonged time out of use, the time and date need to be reset.

Extended menu:

1. ☰
2. **"Settings"**
3. **"Time / Date"**
4. Set current time and date.

Note
When time and date have been set, the control unit automatically checks the function of the flue gas temperature sensor. The display shows: ***"Test flue gas temp sensor"*** *and* ***"Active"****.*
For further details regarding the flue gas temperature sensor test, see page 139.

Further details regarding the individual steps (cont.)

Venting the boiler

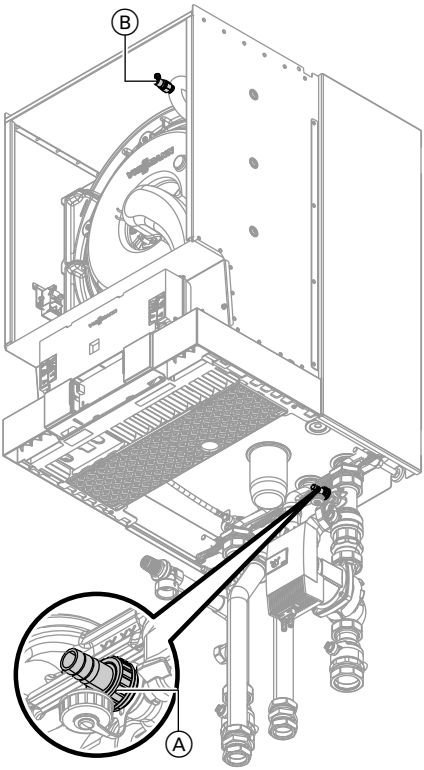

1. Close the shut-off valves on the heating water side.
2. Connect the supply hose to boiler drain & fill valve Ⓐ.
3. Plug the drain hose onto top tap Ⓑ and connect to a drain.
4. Open taps Ⓐ and Ⓑ and vent at mains pressure (purge) until no sound of escaping air can be heard and no more air bubbles are visible.
5. Close taps Ⓐ and Ⓑ, open the shut-off valves on the heating water side.
6. Remove hoses again.

Further details regarding the individual steps (cont.)

Venting the heating system

1. Close the gas shut-off valve and switch the control unit ON.
2. Activate venting program (see next steps).

   Note
   For function and sequence of the venting program, see page 154.

3. Check the system pressure.

Activating the venting function

Weather-compensated control unit	Constant temperature control unit
Service menu 1. Press **OK** and ☰ simultaneously for approx. 4 s. 2. **"Service functions"** 3. **"Venting"** Venting function is enabled. 4. Ending venting function: Press **OK** or ⮌.	Service menu 1. Press **OK** and ☰ simultaneously for approx. 4 s. 2. Select **"⑤"** with ▶ and confirm with **OK**. **"ON"** flashes. 3. Activate the venting function with **OK**. **"EL on"** is shown constantly. 4. Ending venting function: Press ⮌.

Filling the siphon with water

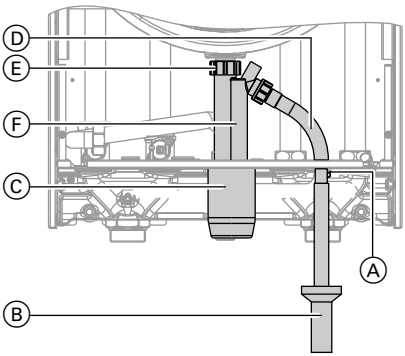

1. Pull off cap Ⓐ downwards.
2. Undo hose Ⓑ.
3. Undo union nut Ⓒ and pull off siphon Ⓓ downwards.
4. Fill siphon Ⓓ with water and refit it.
5. Refit hose Ⓑ.
6. Push on cap Ⓐ from below.

Further details regarding the individual steps (cont.)

Designating heating circuits - only for weather-compensated control units

In the delivered condition, the heating circuits are designated "Heating circuit 1", "Heating circuit 2" and "Heating circuit 3" (if installed).
If the system user prefers, the heating circuits can be designated differently to suit the specific system.

To enter names for heating circuits:

Operating instructions

Checking the gas type

The boiler is equipped with an electronic combustion controller that adjusts the burner for optimum combustion in accordance with the prevailing gas quality.

- Consequently, for natural gas there is no adjustment required across the entire Wobbe index range.
  The boiler can be operated in the Wobbe index range 9.5 to 15.2 kWh/m^3, (34.2 to 54.7 MJ/m^3).
- Convert the burner for operation with LPG (see "Gas type conversion" on page 37).

1. Determine the gas type and Wobbe index by asking your local gas supply utility or LPG supplier.
2. Convert the burner for operation with LPG (see page 37).
3. Record the gas type in the report on page 173.

Further details regarding the individual steps (cont.)

Gas type conversion (only for operation with LPG)

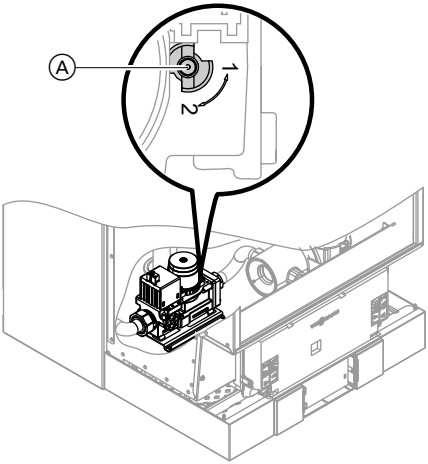

1. Set adjusting screw Ⓐ on the gas train to "2".
2. Switch ON/OFF switch "Ⓘ" on.
3. Select the gas type in coding address "82":
   - Call up code 2
   - Call up **"General"** (weather-compensated control unit)
     or
     Group **"1"** (constant temperature control unit)
   - In coding address "11", select value "9"
   - In coding address "82", select value "1" (LPG operation)
   - In code "11", select value ≠ "9".
   - End service functions.
4. Open the gas shut-off valve.
5. Affix label "G 31" (included with the technical documentation) in a clearly visible position, near the gas train on the cover panel.

Function sequence and possible faults

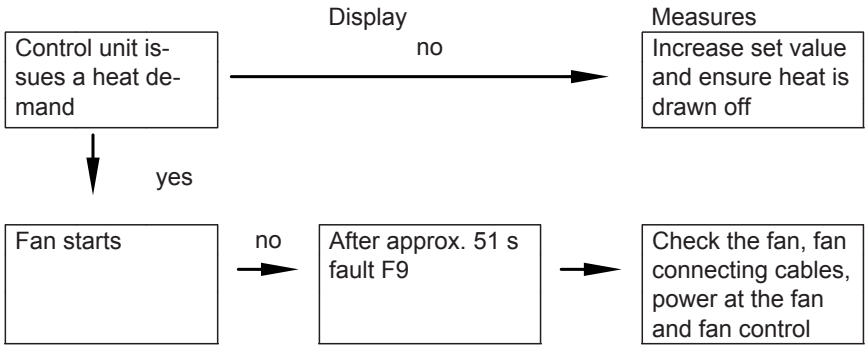

Service

5623 520 GB

Further details regarding the individual steps (cont.)

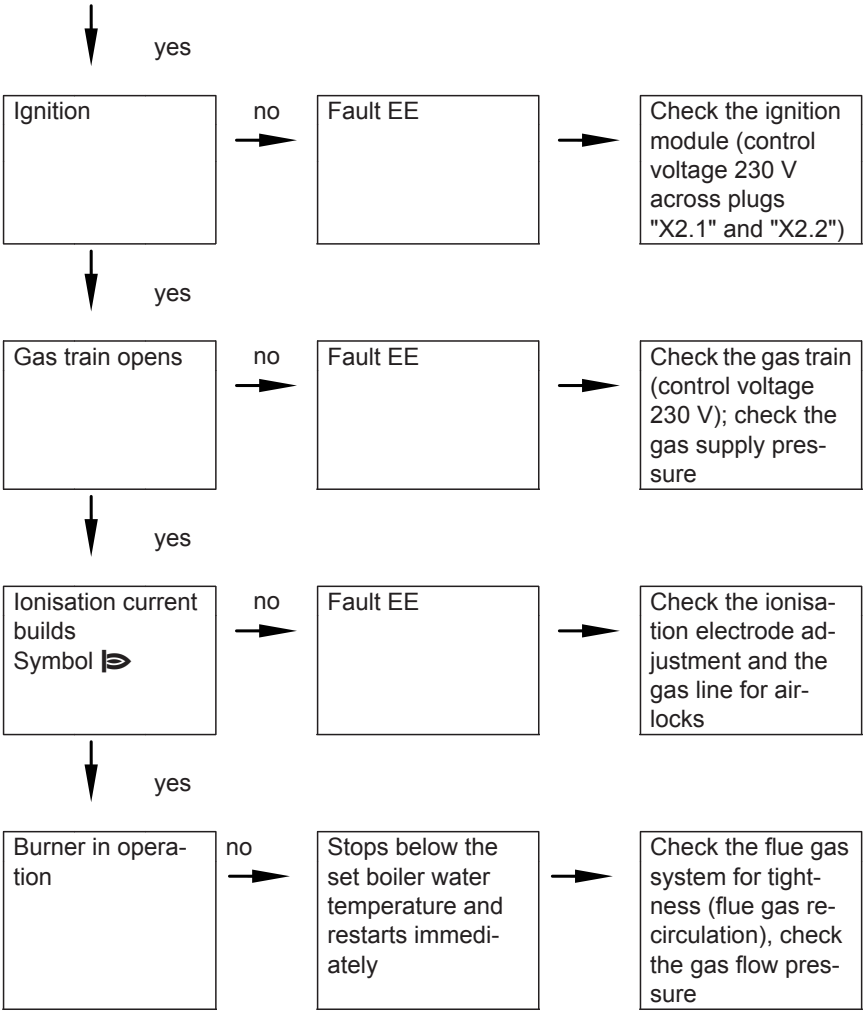

Further details regarding the individual steps (cont.)

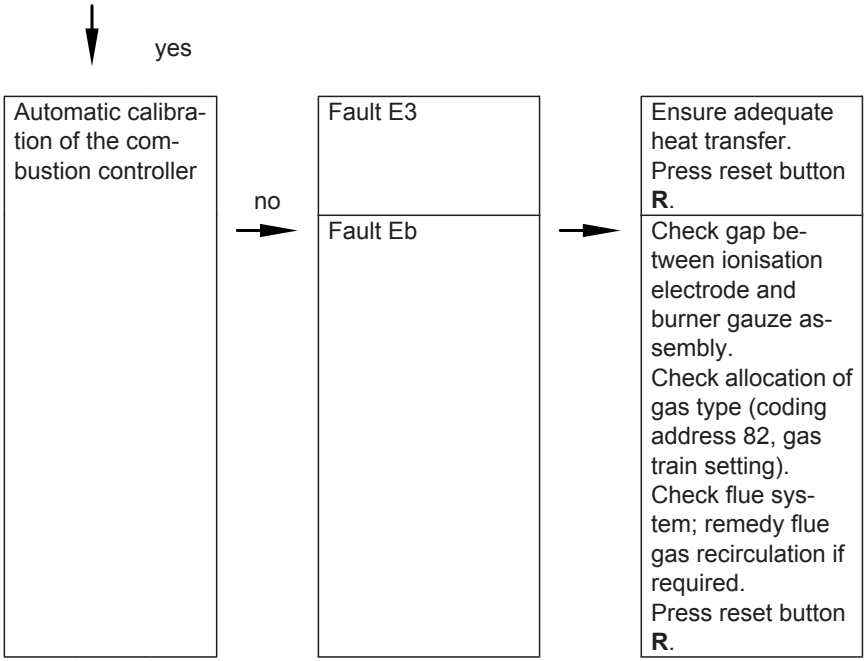

For further details regarding faults, see page 117.

Checking the static and supply pressure

Danger
CO build-up as a result of incorrect burner adjustment can have serious health implications.
Carry out a CO test before and after work on gas appliances.

Operation with LPG
Flush the LPG tank twice during commissioning or replacement. Vent the tank and gas supply line thoroughly after flushing.

Further details regarding the individual steps (cont.)

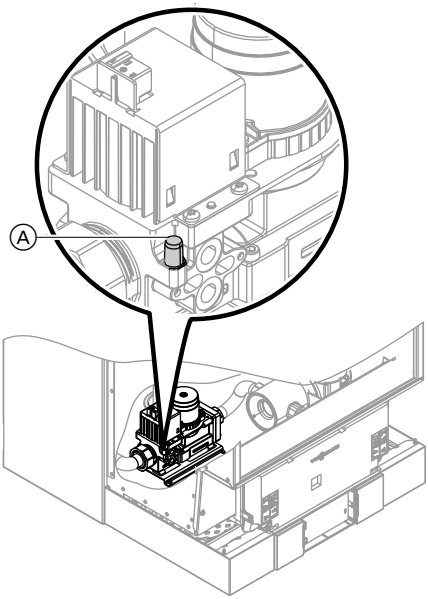

1. Close the gas shut-off valve.

2. Undo screw Ⓐ inside test nipple "PE" on the gas train, but do not remove it, and connect the pressure gauge.

3. Open the gas shut-off valve.

4. Check the static pressure and record the value in the report on page 173.

   Set value: max. 57.5 mbar.

5. Start the boiler.

   Note
   *During commissioning, the boiler can enter a fault state because of airlocks in the gas line. After approx. 5 s, press **R** to reset the burner.*

6. Check the supply (flow) pressure. Set values:
   - Natural gas 20 mbar
   - LPG 50 mbar

   Note
   Use a suitable measuring device with a resolution of at least 0.1 mbar to measure the supply pressure.

7. Record the actual value in the service report.
   Take the action shown in the following table.

8. Shut down the boiler, close the gas shut-off valve, remove the pressure gauge and close test nipple Ⓐ with the screw.

Further details regarding the individual steps (cont.)

9. ⚠ **Danger**
Gas escaping from the test nipple leads to a risk of explosion.
Check for gas tightness.

Open the gas shut-off valve, start the boiler and check for tightness at test nipple Ⓐ.

Supply (flow) pressure for natural gas	Supply (flow) pressure for LPG	Action
below 15 mbar	below 42.5 mbar	Do not start the boiler. Notify your gas supply utility or LPG supplier.
15 to 25 mbar	42.5 to 57.5 mbar	Start the boiler.
above 25 mbar	above 57.5 mbar	Install a separate gas pressure governor upstream of the system and regulate the pre-charge pressure to 20 mbar for natural gas or 50 mbar for LPG. Notify your gas supply utility or LPG supplier.

Maximum output setting

The maximum output for **heating operation** can be limited. The limit is set via the modulation range. The max. adjustable output is limited upwards by the boiler coding card.

Weather-compensated control unit:

1. Press **OK** and ☰ simultaneously for approx. 4 s.
2. **"Service functions"**
3. **"Max. output"**
4. **"Change?"** Select **"Yes"**.
A value appears on the display (e.g. "85"). In the delivered condition, this value represents 100 % of rated heating output.
5. Set the required value.

Constant temperature control unit:

1. Press **OK** and ☰ simultaneously for approx. 4 s.

Service

Further details regarding the individual steps (cont.)

2. Select "③" with ▶ and confirm with **OK**.
   A value flashes on the display (e.g. "85") and "⊳" appears. In the delivered condition, this value represents 100 % of rated heating output.
3. Select required value and confirm with **OK**.

Checking the balanced flue system for tightness (annular gap check)

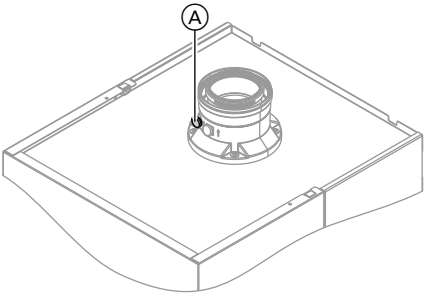

Ⓐ Combustion air aperture

For balanced flue systems tested together with the wall mounted gas fired boiler, the requirement for a tightness test during commissioning by the flue gas inspector is not applicable.

We recommend that your heating engineer carries out a simple leak/tightness test during the commissioning of your system. For this, it would be sufficient to check the CO_2 or O_2 concentration in the combustion air at the annular gap of the balanced flue pipe.
The flue pipe is deemed to be gas-tight if the CO_2 concentration in the combustion air is no higher than 0.2 % or the O_2 concentration is at least 20.6 %.
If actual CO_2 values are higher or O_2 values are lower, then pressure test the flue pipe with a static pressure of 200 Pa.

Further details regarding the individual steps (cont.)

Removing the burner and checking the burner gasket

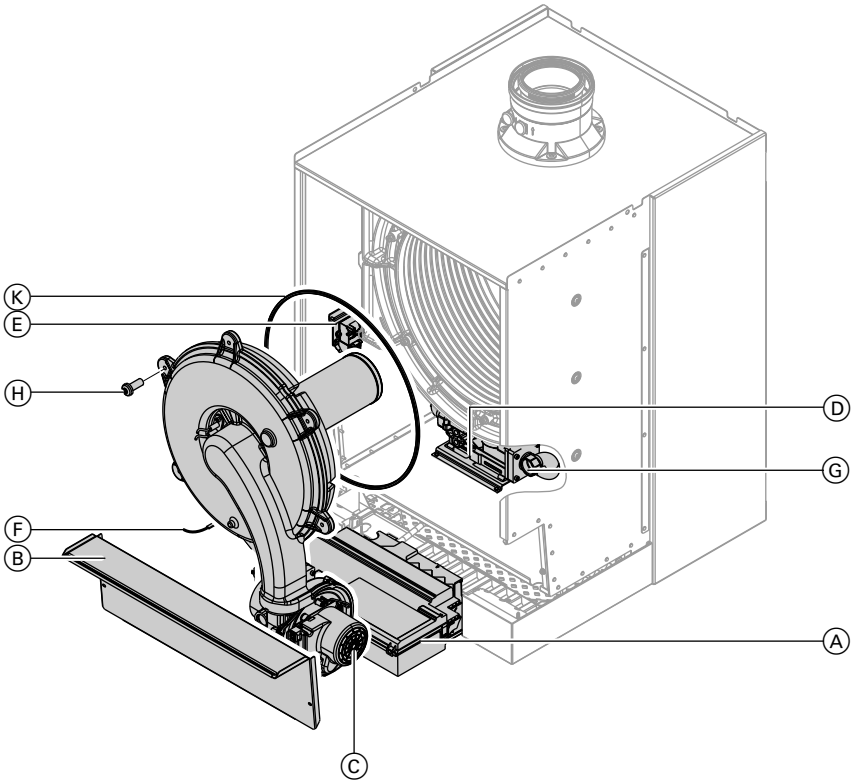

1. Switch OFF the main power supply and the ON/OFF switch at the control unit.
2. Close the gas shut-off valve and safeguard against reopening.
3. Unlock control unit Ⓐ and pivot forwards.
4. Remove cover panel Ⓑ.
5. Pull cables from fan motor Ⓒ, gas train Ⓓ, ignition unit Ⓔ and ionisation electrode Ⓕ.
6. Undo gas supply pipe fitting Ⓖ.
7. Undo six screws Ⓗ and remove the burner.

! **Please note**
To prevent damage, never touch the mesh of the burner gauze assembly.

Further details regarding the individual steps (cont.)

8. Check burner gasket Ⓚ for damage.
Replace gasket if required.

Checking the burner gauze assembly & replacing if required

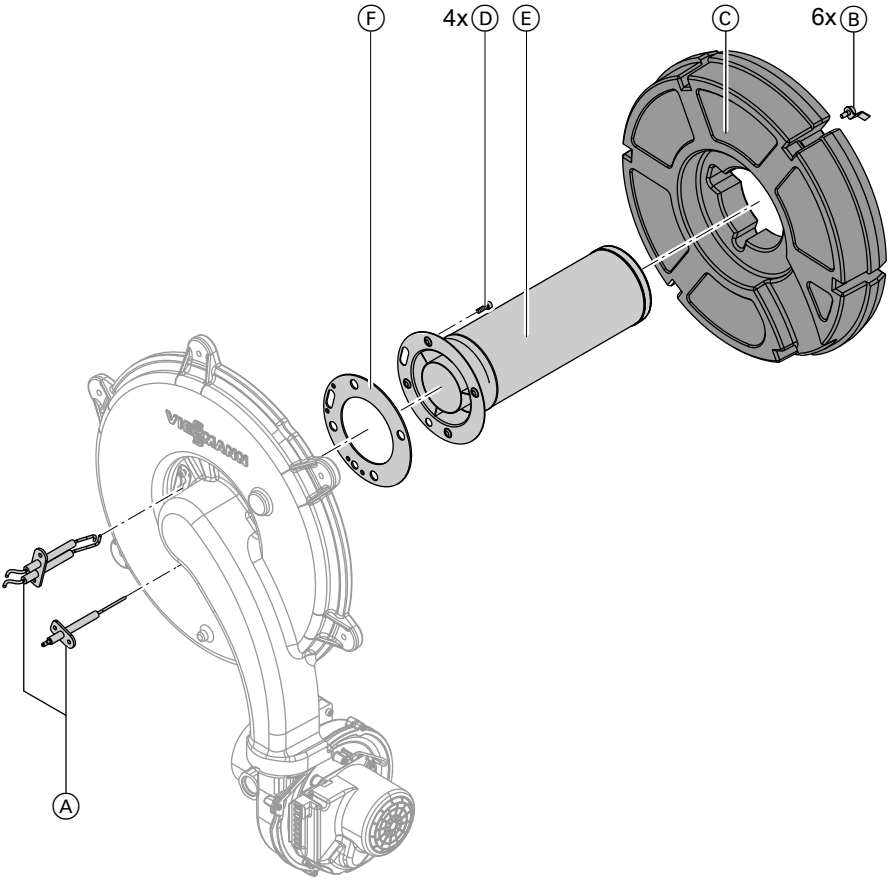

1. Remove electrodes Ⓐ.

2. Undo six retaining clips Ⓑ on thermal insulation ring Ⓒ and then remove thermal insulation ring Ⓒ.

3. Undo four Torx screws Ⓓ and remove burner gauze assembly Ⓔ with burner gauze assembly gasket Ⓕ.

5623 520 GB

Further details regarding the individual steps (cont.)

4. Insert new burner gauze assembly Ⓔ with new gasket Ⓕ and secure with four Torx screws.
   Torque: 4.0 Nm

5. Refit thermal insulation ring Ⓒ and electrodes Ⓐ.

Checking the flue gas non-return device

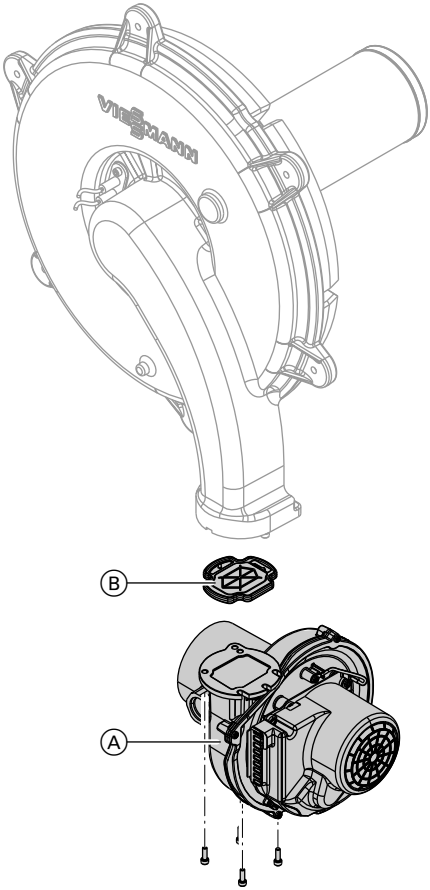

1. Undo three screws and remove fan Ⓐ.

2. Remove flue gas non-return device Ⓑ.

Further details regarding the individual steps (cont.)

3. Check the damper and gasket for dirt and damage. Replace as necessary.

4. Refit flue gas non-return device Ⓑ.

5. Refit fan Ⓐ and secure with three screws.
   Torque: 3.0 Nm.

Checking and adjusting the ignition and ionisation electrodes

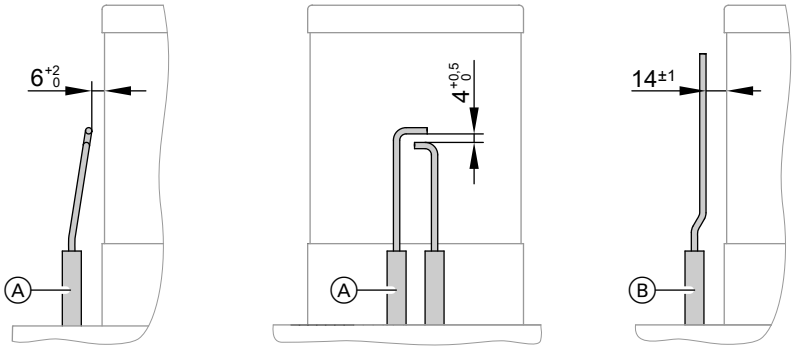

Ⓐ Ignition electrodes

Ⓑ Ionisation electrode

1. Check the electrodes for wear and contamination.

2. Clean the electrodes with a small brush (not with a wire brush) or sandpaper.

   ! **Please note**
   Do not damage the mesh of the
   burner gauze assembly.

3. Check the electrode gaps. If the gaps are not as specified or the electrodes are damaged, replace the electrodes together with new gaskets and adjust them as required. Tighten the electrode fixing screws with 3 Nm.

Further details regarding the individual steps (cont.)

Cleaning the combustion chamber/heat exchanger and installing the burner

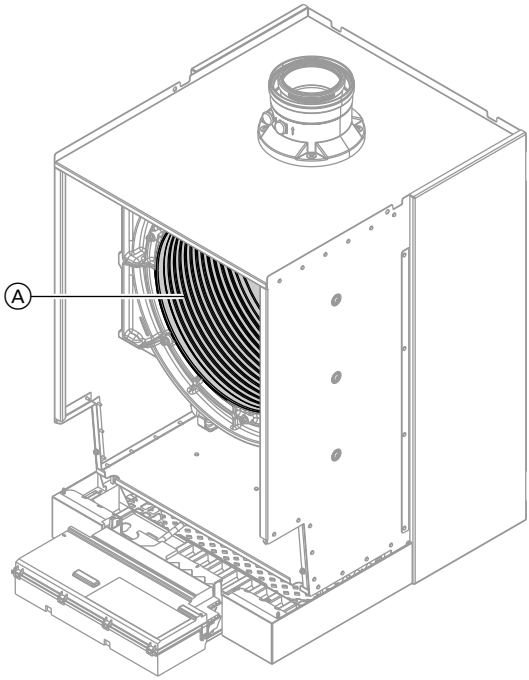

1. ! **Please note**
   Scratches on parts that are in contact with flue gas can lead to corrosion.
   Never use brushes to clean the heating surface.

   Use a vacuum cleaner to remove residues from heat exchanger Ⓐ in the combustion chamber.

2. If necessary, spray slightly acidic, chloride-free cleaning agents based on phosphoric acid onto heat exchanger Ⓐ and let the solution soak in for at least 20 min.

3. Thoroughly flush heat exchanger Ⓐ with water.

4. Install the burner and torque the screws diagonally with 8.5 Nm.

5. Fit the gas supply pipe with a new gasket. Torque fittings with 15 Nm.

Further details regarding the individual steps (cont.)

6. Check the gas connections for tightness.

Danger
Escaping gas leads to a risk of explosion.
Check all fittings for gas tightness.

7. Connect the electrical cables/leads to the corresponding components.

Checking the condensate drain and cleaning the siphon

Note
If condensate escapes at vent aperture Ⓐ or Ⓑ, clean or (if necessary) replace the following drain line.

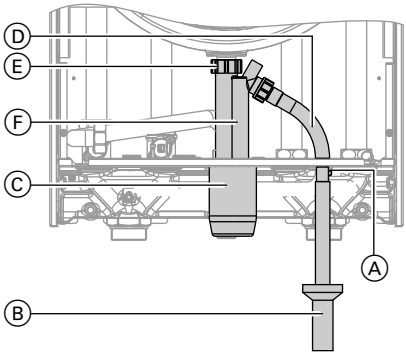

1. Pull off cap Ⓒ downwards.
2. Undo hose Ⓓ.
3. Undo union nut Ⓔ and pull siphon Ⓕ downwards.
4. Clean siphon Ⓕ.
5. Check that the condensate can drain freely to the public sewage system.
6. Fill siphon Ⓕ with water and reassemble.
7. Refit hose Ⓓ.
8. Push on cap Ⓒ from below.

Checking the diaphragm expansion vessel and system pressure

Note
Carry out this test on a cold system.

1. Drain the system or close the cap valve on the diaphragm expansion vessel and reduce the pressure until the pressure gauge indicates "0".

Further details regarding the individual steps (cont.)

2. If the pre-charge pressure of the diaphragm expansion vessel is lower than the static system pressure, top up with nitrogen until the pre-charge pressure is raised by 0.1 to 0.2 bar.
3. Top up with water until the charge pressure of the cooled system is 0.1 to 0.2 bar higher than the pre-charge pressure of the diaphragm expansion vessel.
   Permiss. operating pressure: 6 bar.

Checking all gas equipment for tightness at operating pressure

Danger
Escaping gas leads to a risk of explosion.
Check gas equipment for tightness.

Note
Only use suitable and approved leak detecting agents (EN 14291) and devices for the tightness test. Leak detection agents with unsuitable constituents (e.g. nitrites, sulphides) can cause material damage.
Remove residues of the leak detection agent after testing.

Checking combustion quality

The electronic combustion controller automatically ensures optimum combustion quality. During commissioning/maintenance, only the combustion values need to be checked. For this, measure the CO content plus the CO_2 or O_2 content. For a description of the electronic combustion controller functions, see page 160.

Note
Operate the appliance with uncontaminated combustion air to prevent operating faults and damage.

CO content
- The CO content must be < 1000 ppm for all gas types.

CO_2 or O_2 content
- The CO_2 content must be within the following limits (upper and lower output):
  – 7.5 to 9.6 % for natural gas E and LL
  – 9.0 to 11.3 % for LPG P
- For all gas types, the O_2 content must be between 3.8 and 7.3 %.

If the actual CO_2 or O_2 values lie outside their respective ranges, check the balanced flue system for tightness, see page 42.

Note
During commissioning, the combustion controller carries out an automatic calibration. Only test the emissions approx. 30 s after the burner has started.

Further details regarding the individual steps (cont.)

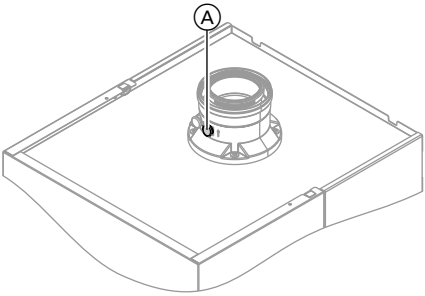

1. Connect a flue gas analyser at flue gas port Ⓐ on the boiler flue connection.
2. Open the gas shut-off valve, start the boiler and create a heat demand.
3. Set the lower heating output (see page 50).
4. Check the CO_2 content. Should the actual value deviate from the aforementioned ranges by more than 1 %, implement steps from page 49.
5. Enter actual values into the report.
6. Select the upper output (see page 50).
7. Check the CO_2 content. Should the actual value deviate from the aforementioned ranges by more than 1 %, implement steps from page 49.
8. After testing, press **OK**.
9. Enter actual values into the report.

Select higher/lower heating output

Weather-compensated control unit	Constant temperature control unit
Service menu 1. Press **OK** and ☰ simultaneously for approx. 4 s. 2. **"Actuator test"** 3. Select the lower heating output: Select **"Base load OFF"**. Then **"Base load ON"** appears and the burner operates at its lower heating output. 4. Select the upper heating output: Select **"Full load OFF"**. Then **"Full load ON"** appears and the burner operates at its upper heating output. 5. Ending output selection: Press ⮌.	Service menu 1. Press **OK** and ☰ simultaneously for approx. 4 s. 2. Select "⚡" with ▶ and confirm with **OK**. The display shows "**I**" and **"ON"** flashes. 3. Select the lower heating output: Press **OK**, **"ON"** will be displayed constantly. 4. Select the upper heating output: Press ⮌. 5. Select **"2"** with ▶, **"ON"** flashes. 6. Press **OK**, **"ON"** will be displayed constantly. 7. Ending output selection: Press ⮌.

Further details regarding the individual steps (cont.)

Matching the control unit to the heating system

The control unit must be matched to the equipment level of the system. Various system components are recognised automatically by the control unit and the relevant codes are adjusted automatically.

- For the selection of an appropriate scheme, see the following diagrams.
- For coding steps, see page 66.

System version 1

One heating circuit without mixer A1, with/without DHW heating, with low loss header

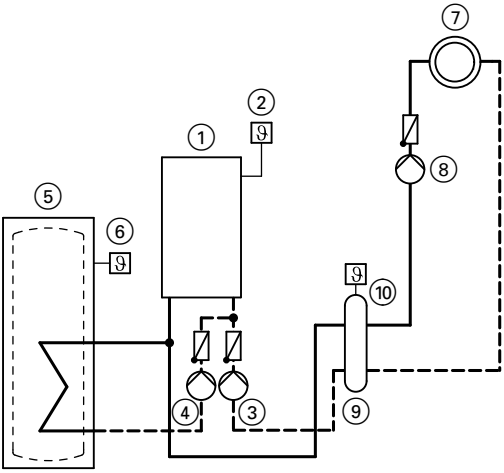

ID: 4605139_1103_02

① Vitodens 200-W
② Outside temperature sensor (only for weather-compensated control units)
or
Vitotrol 100 (only for constant temperature control units)
③ Boiler circuit pump
④ Circulation pump for cylinder heating
⑤ DHW cylinder
⑥ Cylinder temperature sensor
⑦ Heating circuit without mixer A1 (heating circuit 1)
⑧ Heating circuit pump A1
⑨ Low loss header

Service

5623 520 GB

Further details regarding the individual steps (cont.)

⑩ Flow temperature sensor, low loss header

Function/system components	Code	
	Adjust	Group
Operation with LPG	82:1	**"General"/1**
System with low loss header and without DHW circulation pump: Heating circuit pump A1 connection at internal extension H1 or H2	53:2	**"General"/1**
System with low loss header and with DHW circulation pump: Heating circuit pump A1 connection at extension AM1, terminal A1	—	**"General"/1**
DHW circulation pump connection at internal extension H1 or H2	—	**"General"/1**
System with low loss header	04:0	**"Boiler"/1**

Further details regarding the individual steps (cont.)

System version 2

One heating circuit with mixer M2, with/without DHW heating, with low loss header

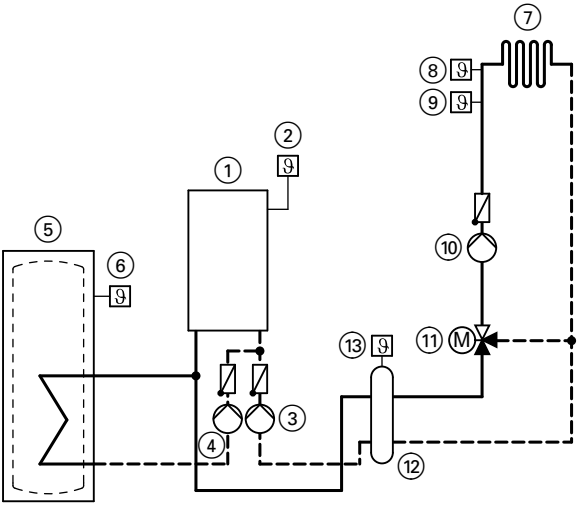

ID: 4605140_1103_02

1. Vitodens 200-W
2. Outside temperature sensor
3. Boiler circuit pump
4. Circulation pump for cylinder heating
5. DHW cylinder
6. Cylinder temperature sensor
7. Heating circuit with mixer M2 (heating circuit 2)
8. Temperature limiter to restrict the maximum temperature of underfloor heating systems
9. Flow temperature sensor M2
10. Heating circuit pump M2
11. Extension kit for one heating circuit with mixer M2
12. Low loss header
13. Flow temperature sensor, low loss header

Further details regarding the individual steps (cont.)

Function/system components	Code	
	Adjust	Group
Operation with LPG	82:1	**"General"**
System **only** with one heating circuit with mixer with extension kit for mixer (without unregulated heating circuit)		
■ with DHW cylinder	00:4	**"General"**
■ without DHW cylinder	00:3	**"General"**
System **with** DHW circulation pump DHW circulation pump connection at internal extension H1 or H2	—	**"General"**
System with low loss header	04:0	**"Boiler"**

System version 3

One heating circuit with mixer M2, with system separation, with/without DHW heating

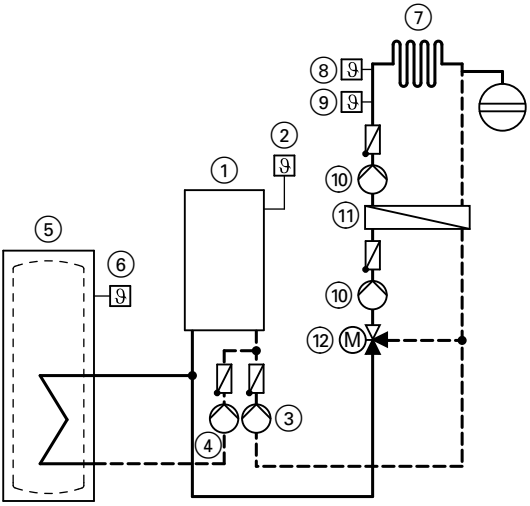

ID: 4605141_1103_02

① Vitodens 200-W
② Outside temperature sensor
③ Boiler circuit pump
④ Circulation pump for cylinder heating
⑤ DHW cylinder
⑥ Cylinder temperature sensor

5623 520 GB

Further details regarding the individual steps (cont.)

⑦ Heating circuit with mixer M2 (heating circuit 2)
⑧ Temperature limiter to restrict the maximum temperature of underfloor heating systems
⑨ Flow temperature sensor M2
⑩ Heating circuit pump M2
⑪ Heat exchanger for system separation
⑫ Extension kit for one heating circuit with mixer M2

Function/system components	Code	
	Adjust	Group
Operation with LPG	82:1	**"General"**
System **only** with one heating circuit with mixer with extension kit for mixer (without unregulated heating circuit)		
■ with DHW cylinder	00:4	**"General"**
■ without DHW cylinder	00:3	**"General"**
System **with** DHW circulation pump DHW circulation pump connection at internal extension H1 or H2	—	**"General"**

Further details regarding the individual steps (cont.)

System version 4

One heating circuit without mixer, one heating circuit with mixer M2 (with extension kit), one heating circuit with mixer M3 (with extension kit) and low loss header (with/without DHW heating)

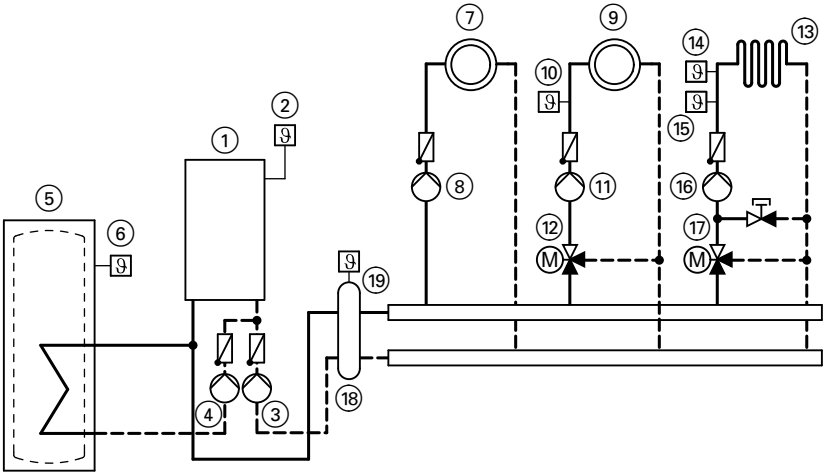

ID: 4605142_1103_02

① Vitodens 200-W
② Outside temperature sensor
③ Boiler circuit pump
④ Circulation pump for cylinder heating
⑤ DHW cylinder
⑥ Cylinder temperature sensor
⑦ Heating circuit without mixer A1 (heating circuit 1)
⑧ Heating circuit pump A1
⑨ Heating circuit with mixer M2 (heating circuit 2)
⑩ Flow temperature sensor M2
⑪ Heating circuit pump M2
⑫ Extension kit for one heating circuit with mixer M2
⑬ Heating circuit with mixer M3 (heating circuit 3)
⑭ Temperature limiter to restrict the maximum temperature of underfloor heating systems
⑮ Flow temperature sensor M3
⑯ Heating circuit pump M3
⑰ Extension kit for one heating circuit with mixer M3
⑱ Low loss header
⑲ Flow temperature sensor, low loss header

5623 520 GB

Further details regarding the individual steps (cont.)

Function/system components	Code	
	Adjust	Group
Operation with LPG	82:1	**"General"**
System **only** with two heating circuits with mixer, with extension kit for heating circuit with mixer (without unregulated heating circuit) ■ with DHW cylinder ■ without DHW cylinder	 00:8 00:7	 **"General"** **"General"**
System **without** DHW circulation pump Heating circuit pump A1 connection at internal extension H1 or H2	53:2	**"General"**
System **with** DHW circulation pump Heating circuit pump A1 connection at extension AM1, terminal A1 DHW circulation pump connection at extension AM1, terminal A2	 — —	 **"General"** **"General"**
System with low loss header	04:0	**"Boiler"**

System version 5

Multi boiler system with several heating circuits with mixer and low loss header (with/without DHW heating)

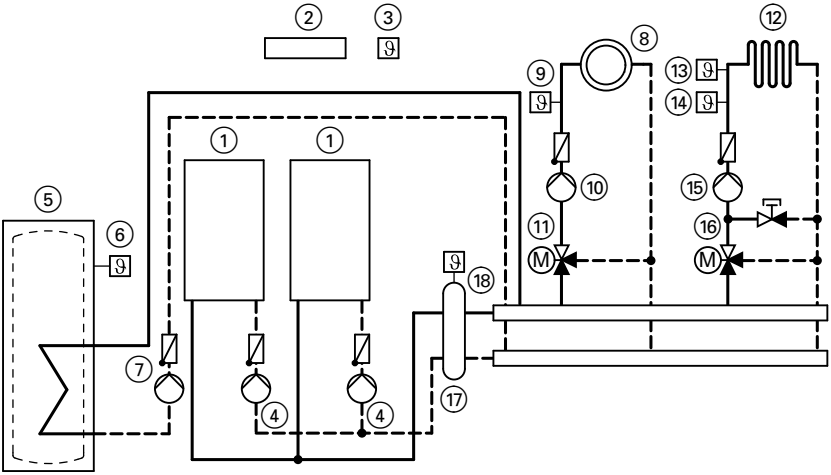

ID: 4605016_1103_04

Further details regarding the individual steps (cont.)

① Vitodens 200-W
② Vitotronic 300-K
③ Outside temperature sensor
④ Boiler circuit pump
⑤ DHW cylinder
⑥ Cylinder temperature sensor
⑦ Circulation pump for cylinder heating
⑧ Heating circuit with mixer M2 (heating circuit 2)
⑨ Flow temperature sensor M2
⑩ Heating circuit pump M2
⑪ Extension kit for one heating circuit with mixer M2
⑫ Heating circuit with mixer M3 (heating circuit 3)
⑬ Temperature limiter to restrict the maximum temperature of underfloor heating systems
⑭ Flow temperature sensor M3
⑮ Heating circuit pump M3
⑯ Extension kit for one heating circuit with mixer M3
⑰ Low loss header
⑱ Flow temperature sensor, low loss header

Required codes	Address
Multi boiler system with Vitotronic 300-K	01:2

Note
Codes for multi boiler system, see Vitotronic 300-K installation and service instructions

Adjusting the heating curves (only for weather-compensated control units)

The heating curves illustrate the relationship between the outside temperature and the boiler water or flow temperature.
To put it simply: The lower the outside temperature, the higher the boiler water or flow temperature.
The room temperature, in turn, depends on the boiler water or flow temperature.

Settings in the delivered condition:
- Slope = 1.4
- Level = 0

Note
If the heating system includes heating circuits with mixers, then the flow temperature of the heating circuit without mixer is higher by a selected differential (8 K in the delivered condition) than the flow temperature of the heating circuits with mixers.
The differential temperature is adjustable via coding address "9F" in the ***"General"*** *group.*

Further details regarding the individual steps (cont.)

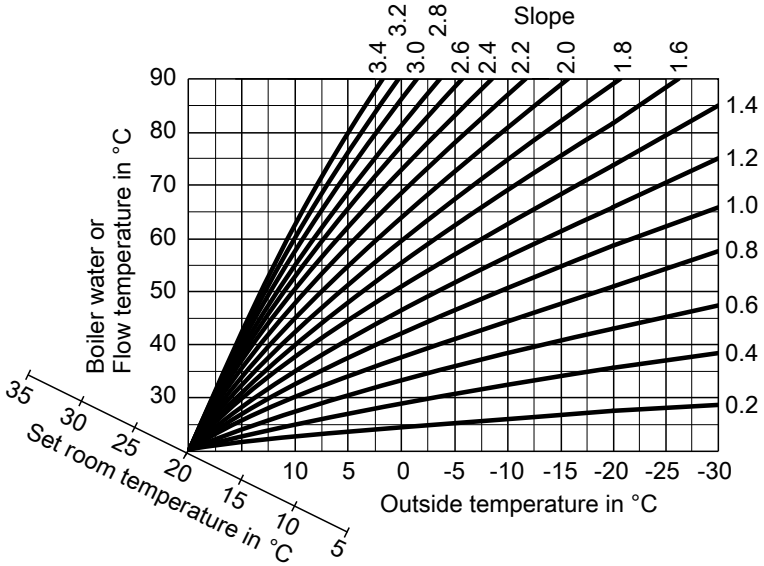

Slope setting ranges:

- Underfloor heating systems: 0.2 to 0.8
- Low temperature heating systems: 0.8 to 1.6

Selecting the set room temperature

Individually adjustable for each heating circuit.
The heating curve is offset along the axis of the set room temperature. When the heating circuit pump logic function has been enabled, the curve modifies the starting and stopping characteristics of the heating circuit pump.

Standard set room temperature

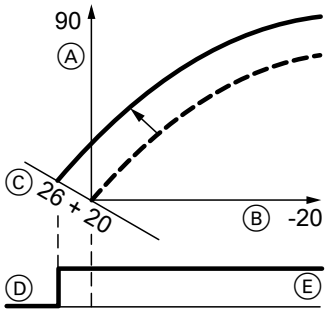

Example 1: Change in the standard set room temperature from 20 to 26 °C

Ⓐ Boiler water temperature or flow temperature in °C
Ⓑ Outside temperature in °C
Ⓒ Set room temperature in °C

Service

5623 520 GB

Further details regarding the individual steps (cont.)

Ⓓ Heating circuit pump "OFF"
Ⓔ Heating circuit pump "ON"

Changing the standard set room temperature

Operating instructions

Reduced set room temperature

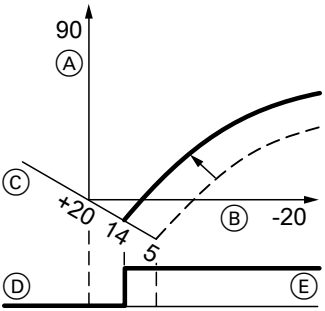

Example 2: Change in the reduced set room temperature from 5 °C to 14 °C

Ⓐ Boiler water temperature or flow temperature in °C
Ⓑ Outside temperature in °C
Ⓒ Set room temperature in °C
Ⓓ Heating circuit pump "OFF"
Ⓔ Heating circuit pump "ON"

Changing the reduced set room temperature

Operating instructions

Changing the slope and level

Individually adjustable for each heating circuit.

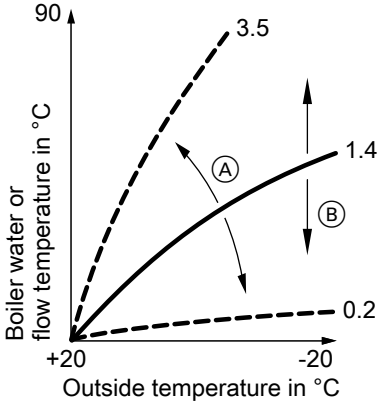

Ⓐ Changing the slope
Ⓑ Changing the level (vertical parallel offset of the heating curve)

Extended menu:

1. ☰
2. **"Heating"**
3. Select heating circuit.
4. **"Heating curve"**
5. **"Slope"** or **"Level"**
6. Select heating curve according to the system requirements.

5623 520 GB

Further details regarding the individual steps (cont.)

Connecting the control unit to the LON

The LON communication module must be plugged in.

Note
The data transfer via the LON can take several minutes.

Note
*In the LON system, the same subscriber number **cannot** be allocated twice.*
***Only one Vitotronic** may be programmed as fault manager.*

Single boiler system with Vitotronic 200-H and Vitocom 300 (example)

Set the LON subscriber numbers and further functions via code 2 in group **"General"** (see following table).

Boiler control unit	Vitotronic 200-H	Vitotronic 200-H	Vitocom
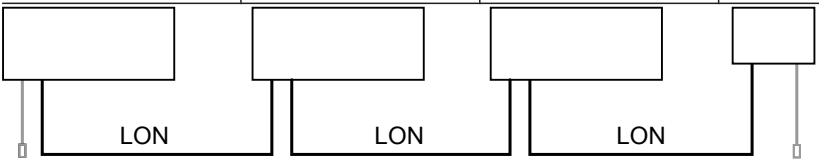			
Subscriber no. 1 Code "77:1"	Subscriber no. 10 Code "77:10"	Subscriber no. 11 **Set** code "77:11"	Subscriber no. 99
Control unit is fault manager Code "79:1"	Control unit is not fault manager Code "79:0"	Control unit is not fault manager Code "79:0"	Device is fault manager
Control unit transmits the time Code "7b:1"	The control unit receives the time **Set** code "81:3"	The control unit receives the time **Set** code "81:3"	Device receives the time
Control unit transmits outside temperature **Set** code "97:2"	Control unit receives outside temperature **Set** code "97:1"	Control unit receives outside temperature **Set** code "97:1"	—
LON subscriber fault monitoring Code "9C:20"	LON subscriber fault monitoring Code "9C:20"	LON subscriber fault monitoring Code "9C:20"	—

Further details regarding the individual steps (cont.)

Carrying out a LON subscriber check

The subscriber check is used to test communication with the system devices connected to the fault manager.

Preconditions:
- The control unit must be programmed as **fault manager** (code "79:1")
- The LON subscriber number must be programmed in all control units (see page 61)
- The LON subscriber list in the fault manager must be up to date (see page 61)

Carry out subscriber check:

1. Press **OK** and ☰ simultaneously for approx. 4 s.
2. **"Service functions"**
3. **"Subscriber check"**
4. Select subscriber (e.g. subscriber 10).
   The subscriber check for the selected subscriber is initiated.
   - Successfully tested subscribers are designated with **"OK"**.
   - Unsuccessfully tested subscribers are designated with **"Not OK"**.

Note
*To carry out a new subscriber check, create a new subscriber list with menu item **"Delete list?"***

Note
*If the subscriber check is carried out by another control unit, the subscriber number and **"Wink"** appear on the display for approx. 1 min.*

Calling up and resetting the "Service" display

The red fault indicator flashes when the limits set in coding address "21" and "23" in group **"Boiler"** have been reached.

The following appears on the programming unit display:
- On a constant temperature control unit:
  The specified hours run or the specified interval with calendar symbol "📅" (subject to setting) and "🔧"
- On a weather-compensated control unit:
  "Service" and "🔧"

Acknowledging and resetting service

Press **OK** to acknowledge a service message.

Note
An acknowledged service message that was not reset reappears:
- *On a weather-compensated control unit, on the following Monday.*
- *On a constant temperature control unit, after seven days.*

Further details regarding the individual steps (cont.)

After a service has been carried out (resetting service)

Weather-compensated control unit

1. Press **OK** and ☰: simultaneously for approx. 4 s.
2. **"Service functions"**
3. **"Service reset"**

   Note
   The selected service parameters for hours run and interval restart at 0.

Constant temperature control unit

Reset code 24:1 in group **"2"** to 24:0.

Note
The selected service parameters for hours run and interval restart at 0.

Further details regarding the individual steps (cont.)

Fitting the front panel

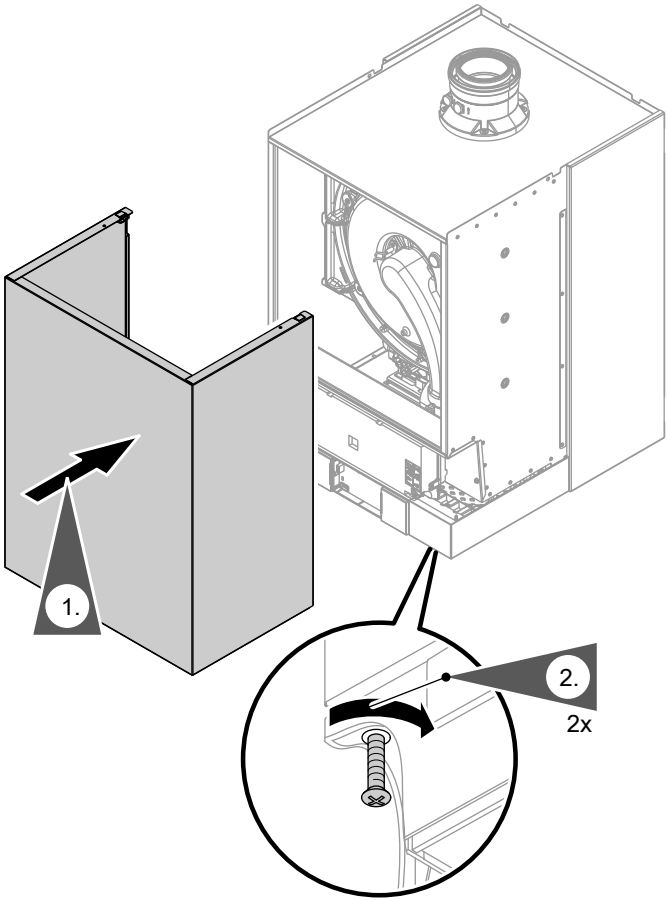

Note
Ensure the locking screws are fitted before operating.

Further details regarding the individual steps (cont.)

Instructing the system user

The system installer should hand the operating instructions to the system user and instruct the user in operating the system.

Calling up coding level 1

Calling up coding level 1

Note

- *On weather-compensated control units, codes are displayed as plain text.*
- *Codes that have not been assigned due to the heating system equipment level or the setting of other codes are not displayed.*
- *Heating systems with one heating circuit without mixer and one or two heating circuits with mixer:*
  *The heating circuit without mixer is designated **"Heating circuit 1"** and the heating circuits with mixer as **"Heating circuit 2"** or **"Heating circuit 3"**.*
  *If the heating circuits were given individual designations, the selected designation and **"HC1"**, **"HC2"** or **"HC3"** appear instead.*

Weather-compensated control unit:

1. Press **OK** and ☰ simultaneously for approx. 4 s.

2. **"Coding level 1"**

3. Select group of required coding address:
   - **"General"**
   - **"Boiler"**
   - **"DHW"**
   - **"Solar"**
   - **"Heating circuit 1/2/3"**
   - **"All codes std device"**
     In this group, all coding addresses from coding level 1 (except the coding addresses from the **"Solar"** group) are displayed in ascending order.

4. Select coding address.

5. Select value according to the following tables and confirm with **OK**.

6. **If you want to reset all codes to their delivered condition:**
   Select **"Standard setting"** in **"Coding level 1"**.

   Note
   This also resets codes at coding level 2.

Constant temperature control unit:

1. Press **OK** and ☰ simultaneously for approx. 4 s.

2. Select "①" with ▶ for coding level 1 and confirm with **OK**.
   "**I**" flashes on the display for the coding addresses in group 1.

3. Select the group for the required coding address with ▲/▼:
   1: **"General"**
   2: **"Boiler"**
   3: **"DHW"**
   4: **"Solar"**
   5: **"Heating circuit 1"**
   6: **"All codes std device"**
   In this group, all coding addresses are displayed in ascending order.
   Confirm selected category with **OK**.

4. Select coding address with ▲/▼.

Calling up coding level 1 (cont.)

5. Set value according to the following tables with ▲/▼ and confirm with **OK**.

6. **If you want to reset all codes to their delivered condition:**
   Select **"7"** with ▶ and confirm with **OK**.
   When "⊢⊣" flashes, confirm with **OK**.

   Note
   This also resets codes at coding level 2.

General/group "1"

Select **"General"** for weather-compensated control units (see page 66).
Select **"1"** for constant temperature control units (see page 66).

Coding

Coding in the delivered condition		Possible change	
System design			
00:1	System version 1: One heating circuit without mixer A1 (heating circuit 1), without DHW heating	00:2 to 00:10	For system schemes, see the following table:

Value address 00: ...	System version	Description
2	1	One heating circuit without mixer A1 (heating circuit 1), with DHW heating (code is adjusted automatically)
3	2.3	One heating circuit with mixer M2 (heating circuit 2), without DHW heating
4	2.3	One heating circuit with mixer (heating circuit 2), with DHW heating
5	4	One heating circuit without mixer A1 (heating circuit 1) and one heating circuit with mixer M2 (heating circuit 2), without DHW heating (code is adjusted automatically)
6	4	One heating circuit without mixer A1 (heating circuit 1) and one heating circuit with mixer M2 (heating circuit 2), with DHW heating (code is adjusted automatically)

General/group "1" (cont.)

Value address 00: ...	System version	Description
7	4	One heating circuit with mixer M2 (heating circuit 2) and one heating circuit with mixer M3 (heating circuit 3), without DHW heating
8	4	One heating circuit with mixer M2 (heating circuit 2) and one heating circuit with mixer M3 (heating circuit 3), with DHW heating
9	4	One heating circuit without mixer A1 (heating circuit 1), one heating circuit with mixer M2 (heating circuit 2) and one heating circuit with mixer M3 (heating circuit 3), without DHW heating (code is adjusted automatically)
10	4	One heating circuit without mixer A1 (heating circuit 1), one heating circuit with mixer M2 (heating circuit 2) and one heating circuit with mixer M3 (heating circuit 3), with DHW heating (code is adjusted automatically)

Coding in the delivered condition		Possible change	
Internal circulation pump function			
51:0	System with low loss header: Internal circulation pump always starts when there is a heat demand	51:1	System with low loss header: When there is a heat demand, the internal circulation pump is only started if the burner is operational. Circulation pump is switched off when run-on time expires.
		51:2	System with heating water buffer cylinder: When there is a heat demand, the internal circulation pump is only started if the burner is operational. Circulation pump is switched off when run-on time expires.

General/group "1" (cont.)

Coding in the delivered condition		Possible change	
Subscriber no.			
77:1	LON subscriber number (only for weather-compensated control units)	77:2 to 77:99	LON subscriber number, adjustable from 1 to 99: 1 - 4 = Boiler 5 = Cascade 10 - 97 = Vitotronic 200-H 98 = Vitogate 99 = Vitocom ***Note*** *Allocate each number only* ***once****.*
Detached house/apartment building			
7F:1	Detached house (only for weather-compensated control units)	7F:0	Apartment building Separate adjustment of holiday program and time program for DHW heating possible.
Lock out controls			
8F:0	Operation in the standard menu and extended menu enabled. ***Note*** *The respective code is only activated when you exit the service menu.*	8F:1	Operation in standard menu **and** extended menu blocked. Emissions test mode can be enabled.
		8F:2	Operation enabled in the standard menu and blocked in the extended menu. Emissions test mode can be enabled.
Set flow temperature for external demand			
9b:70	Set flow temperature for external demand 70 °C	9b:0 to 9b:127	Set flow temperature for external demand adjustable from 0 to 127 °C (limited by boiler-specific parameters)

Boiler/group "2"

Select **"Boiler"** for weather-compensated control units (see page 66).
Select **"2"** for constant temperature control units (see page 66).

Coding

Coding in the delivered condition		Possible change	
Single/multi boiler system			
01:1	Single boiler system (only for constant temperature control units)	01:2	Multi boiler system with Vitotronic 300-K
Boiler number			
07:1	Boiler number in multi boiler systems (only for constant temperature control units)	07:2 to 07:8	Boiler number 2 to 8 in multi boiler systems
Burner service in 100 hours			
21:0	No service interval (hours run) selected	21:1 to 21:100	Number of hours run before the burner should be serviced is adjustable from 100 to 10,000 h One adjusting step ≙ 100 h
Service interval in months			
23:0	No time interval for burner service	23:1 to 23:24	Interval adjustable from 1 to 24 months
Service status			
24:0	No **"Service"** display	24:1	**"Service"** display (the address is automatically set and must be manually reset after a service has been carried out)
Filling/Venting			
2F:0	Venting program/fill program disabled	2F:1	Venting program enabled
		2F:2	Fill program enabled

DHW/group "3"

Select **"DHW"** for weather-compensated control units (see page 66).
Select **"3"** for constant temperature control units (see page 66).

DHW/group "3" (cont.)

Coding

Coding in the delivered condition		Possible change	
Set DHW temperature reheating suppression			
67:40	For solar DHW heating: Set DHW temperature 40 °C. Reheating is suppressed above the selected set temperature (boiler is only connected as backup if the rise in cylinder temperature is too low). Cannot be adjusted on gas condensing combi boilers.	67:0 to 67:95	Set DHW temperature adjustable from 0 to 95 °C (limited by boiler-specific parameters)
Enable DHW circulation pump			
73:0	DHW circulation pump: "ON" in accordance with the time program (only for weather-compensated control units)	73:1 to 73:6	"ON" from once per hour for 5 min up to 6 times per hour for 5 min during the time program
		73:7	Constantly "ON"

Solar/group "4"

Select **"Solar"** for weather-compensated control units (see page 66).
Select **"4"** for constant temperature control units (see page 66).

Note
The solar group is only displayed if a solar control module, type SM1, is connected.

Solar/group "4" (cont.)

Coding

Coding in the delivered condition		Possible change	
Speed control solar circuit pump			
02:0	Solar circuit pump is not speed-controlled.	02:1	Solar circuit pump is speed-controlled with wave packet control.
		02:2	Solar circuit pump is speed-controlled with PWM control.
Cylinder maximum temperature			
08:60	Set DHW temperature (maximum cylinder temperature) 60 °C.	08:10 to 08:90	Set DHW temperature adjustable from 10 to 90 °C.
Stagnation time reduction			
0A:5	Temperature differential for stagnation time reduction (reduction in the speed of the solar circuit pump to protect system components and heat transfer medium) 5 K.	0A:0	Stagnation time reduction disabled.
		0A:1 to 0A:40	Temperature differential adjustable from 1 to 40 K.
Flow rate solar circuit			
0F:70	Solar circuit flow rate at the maximum pump speed 7 l/min.	0F:1 to 0F:255	Flow rate adjustable from 0.1 to 25.5 l/min; 1 step ≙ 0.1 l/min.

Solar/group "4" (cont.)

Coding in the delivered condition		Possible change	
Extended solar control functions			
20:0	No extended control function enabled.	20:1	Additional function for DHW heating.
		20:2	Differential temperature control 2.
		20:3	Differential temperature control 2 and auxiliary function.
		20:4	Differential temperature control 2 for central heating backup.
		20:5	Thermostat function.
		20:6	Thermostat function and auxiliary function.
		20:7	Solar heating via external heat exchanger without additional temperature sensor.
		20:8	Solar heating via external heat exchanger with additional temperature sensor.
		20:9	Solar heating of two DHW cylinders.

Heating circuit 1, heating circuit 2, heating circuit 3/group "5"

Select **"Heating circuit ..."** for weather-compensated control units (see page 66).
Select **"5"** for constant temperature control units (see page 66).

Heating circuit 1, heating circuit 2, heating… (cont.)

Coding

Coding in the delivered condition		Possible change	
Priority DHW heating			
A2:2	Cylinder priority applicable to heating circuit pump and mixer	A2:0	Without cylinder priority applied to heating circuit pump and mixer
		A2:1	Cylinder priority only applicable to mixer
		A2:3 to A2:15	Reduced priority applied to mixer (the heating circuit receives a reduced amount of energy)
Economy function outside temperature			
A5:5	With heating circuit pump logic function (economy mode): Heating circuit pump "OFF" when the outside temperature (AT) is 1 K higher than the set room temperature (RT_{set}) $AT > RT_{set} + 1$ K (only for weather-compensated control units)	A5:0	Without heating circuit pump logic function
		A5:1 to A5:15	With heating circuit pump logic function: Heating circuit pump "OFF"; see following table

Parameter address A5:...	With heating circuit pump logic function: Heating circuit pump "OFF"
1	$AT > RT_{set} + 5$ K
2	$AT > RT_{set} + 4$ K
3	$AT > RT_{set} + 3$ K
4	$AT > RT_{set} + 2$ K
5	$AT > RT_{set} + 1$ K
6	$AT > RT_{set}$
7 to 15	$AT > RT_{set} - 1$ K $AT > RT_{set} - 9$ K

Heating circuit 1, heating circuit 2, heating… (cont.)

Coding in the delivered condition		Possible change	
Extended economy function adjusted outside temperature			
A6:36	Extended economy function **disabled** (only for weather-compensated control units)	A6:5 to A6:35	Extended economy function enabled, i.e. the burner and heating circuit pump will stop and the mixer close at a variable value, adjustable between 5 and 35 °C plus 1 °C. The base value is the adjusted outside temperature. This value is based on the actual outside temperature and a time constant, which takes the cooling down of an average building into consideration.
Extended economy function mixer			
A7:0	Without mixer economy function (only for a weather-compensated control unit and heating circuit with mixer)	A7:1	With mixer economy function (extended heating circuit pump logic): Heating circuit pump also "OFF": ■ If the mixer has been attempting to close for longer than 20 min. Heating circuit pump "ON": ■ If the mixer changes to control function ■ If there is a risk of frost
Pump idle time, transition reduced mode			
A9:7	With pump idle time: Heating circuit pump "OFF" if the set value is altered through a change in operating mode or through a change in the set room temperature (only for weather-compensated control units)	A9:0	Without pump idle time
		A9:1 to A9:15	With pump idle time, adjustable from 1 to 15. The higher the value, the longer the pump idle time.

Service

Heating circuit 1, heating circuit 2, heating… (cont.)

Coding in the delivered condition		Possible change	
Weather-compensated/room temperature hook-up			
b0:0	With remote control: Heating mode/reduced mode: weather-compensated (only for weather-compensated control units; only change the code for the heating circuit with mixer)	b0:1	Heating mode: weather-compensated Reduced mode: with room temperature hook-up
		b0:2	Heating mode: with room temperature hook-up Reduced mode: weather-compensated
		b0:3	Heating mode/reduced mode: with room temperature hook-up
Economy function room temperature			
b5:0	With remote control: No room temperature-dependent heating circuit pump logic function (only for weather-compensated control units; only change the code for the heating circuit with mixer)	b5:1 to b5:8	Heating circuit pump logic function, see the following table:

Parameter address b5:...	With heating circuit pump logic function: Heating circuit pump "OFF"	Heating circuit pump "ON"
1	$RT_{actual} > RT_{set} + 5$ K	$RT_{actual} < RT_{set} + 4$ K
2	$RT_{actual} > RT_{set} + 4$ K	$RT_{actual} < RT_{set} + 3$ K
3	$RT_{actual} > RT_{set} + 3$ K	$RT_{actual} < RT_{set} + 2$ K
4	$RT_{actual} > RT_{set} + 2$ K	$RT_{actual} < RT_{set} + 1$ K
5	$RT_{actual} > RT_{set} + 1$ K	$RT_{actual} < RT_{set}$
6	$RT_{actual} > RT_{set}$	$RT_{actual} < RT_{set} - 1$ K
7	$RT_{actual} > RT_{set} - 1$ K	$RT_{actual} < RT_{set} - 2$ K
8	$RT_{actual} > RT_{set} - 2$ K	$RT_{actual} < RT_{set} - 3$ K

Coding in the delivered condition		Possible change	
Min. flow temperature heating circuit			
C5:20	Electronic minimum flow temperature limit 20 °C (only for weather-compensated control units)	C5:1 to C5:127	Minimum limit adjustable from 1 to 127 °C (limited by boiler-specific parameters)

Heating circuit 1, heating circuit 2, heating… (cont.)

Coding in the delivered condition		Possible change	
Max. flow temperature heating circuit			
C6:74	Electronic maximum flow temperature limit 74 °C (only for weather-compensated control units)	C6:10 to C6:127	Maximum limit adjustable from 10 to 127 °C (limited by boiler-specific parameters)
Heating program - changeover			
d5:0	The external heating program changeover changes the heating program to "Constant operation with reduced room temperature" or "Standby mode" (only for weather-compensated control units)	d5:1	The external heating program changeover changes to "Constant operation with standard room temperature" (subject to coding address 3A, 3b and 3C)
Ext. heating program changeover to heating circuit			
d8:0	No heating program changeover via extension EA1	d8:1	Heating program changeover via input DE1 at extension EA1
		d8:2	Heating program changeover via input DE2 at extension EA1
		d8:3	Heating program changeover via input DE3 at extension EA1
Screed drying			
F1:0	Screed drying function disabled (only for weather-compensated control units).	F1:1 to F1:6	Screed drying adjustable in accordance with 6 selectable temperature/time profiles (see page 154)
		F1:15	Constant flow temperature 20 °C
Party mode time limit			
F2:8	Time limit for party mode or external heating program changeover via pushbutton: 8 h (only for weather-compensated control units)*1	F2:0	No time limit for party mode*1
		F2:1 to F2:12	Time limit adjustable from 1 to 12 h*1

*1 *Party mode ends **automatically** in the "Heating and DHW" program, when the system changes over to operation with standard room temperature.*

Service

Heating circuit 1, heating circuit 2, heating… (cont.)

Coding in the delivered condition		Possible change	
Pump control in only DHW mode			
F6:25	In the "Only DHW" operating mode, the circulation pump in the heating circuit connection set is permanently on (only for constant temperature control units)	F6:0	In the "Only DHW" operating mode, the circulation pump in the heating circuit connection set is permanently off
		F6:1 to F6:24	In the "Only DHW" operating mode, the circulation pump in the heating circuit connection set will be started 1 to 24 times per day for 10 min each time.
Pump control in standby mode			
F7:25	In the "Standby" operating mode, the circulation pump in the heating circuit connection set is permanently on (only for constant temperature control units)	F7:0	In the "Standby" operating mode, the circulation pump in the heating circuit connection set is permanently off
		F7:1 to F7:24	In the "Standby" operating mode, the circulation pump in the heating circuit connection set will be started 1 to 24 times per day for 10 min each time.
Start temperature raising			
F8:-5	Temperature limit for terminating the reduced mode -5 ºC; see example on page 157. Observe the setting of coding address "A3". (only for weather-compensated control units)	F8:+10 to F8:-60	Temperature limit adjustable from +10 to -60 °C
		F8:-61	Function disabled
End temperature raising			
F9:-14	Temperature limit for raising the reduced set room temperature -14 ºC; see example on page 157. (only for weather-compensated control units)	F9:+10 to F9:-60	Temperature limit for raising the set room temperature to the value selected for standard mode adjustable from +10 to -60 °C

5623 520 GB

Heating circuit 1, heating circuit 2, heating… (cont.)

Coding in the delivered condition		Possible change	
Set flow temperature increase			
FA:20	Raising the set boiler water temperature or the set flow temperature when changing from operation with reduced room temperature to operation with standard room temperature, by 20 %. See example on page 158 (only for weather-compensated control units).	FA:0 to FA:50	Temperature rise adjustable from 0 to 50 %
Duration set flow temperature increase			
Fb:30	Duration for raising the set boiler water temperature or the set flow temperature (see coding address "FA") 60 min. See example on page 158 (only for weather-compensated control units).	Fb:0 to Fb:150	Duration adjustable from 0 to 300 min; 1 step ≙ 2 min

Calling up coding level 2

Calling up coding level 2

Note

- *At coding level 2, all codes are accessible, including the codes at coding level 1.*
- *Codes that have not been assigned due to the heating system equipment level or the setting of other codes are not displayed.*
- *Heating systems with one heating circuit without mixer and one or two heating circuits with mixer:*
  The heating circuit without mixer is designated ***"Heating circuit 1"*** *and the heating circuits with mixer as* ***"Heating circuit 2"*** *or* ***"Heating circuit 3"****.*
  If the heating circuits were given individual designations, the selected designation and ***"HC1"****,* ***"HC2"*** *or* ***"HC3"*** *appear instead.*

Weather-compensated control unit:

1. Press **OK** and ☰ simultaneously for approx. 4 s.

2. Press **OK** and ⮌ simultaneously for approx. 4 s.

3. **"Coding level 2"**

4. Select group of required coding address:
   - **"General"**
   - **"Boiler"**
   - **"DHW"**
   - **"Solar"**
   - **"Heating circuit 1/2/3"**
   - **"All codes std device"**
     In this group, all coding addresses (except the coding addresses from the **"Solar"** group) are displayed in ascending order.

5. Select coding address.

6. Select value according to the following tables and confirm with **"OK"**.

7. **If you want to reset all codes to their delivered condition:**
   Select **"Standard setting"** in **"Coding level 2"**.

   Note
   This also resets codes at coding level 1.

Constant temperature control unit:

1. Press **OK** and ☰ simultaneously for approx. 4 s.

2. Press **OK** and ⮌ simultaneously for approx. 4 s.

3. Select **"②"** with ▶ for coding level 2 and confirm with **OK**.
   "I" flashes on the display for the coding addresses in category 1.

Calling up coding level 2 (cont.)

4. Select the group for the required coding address with ▲/▼:
   1: **"General"**
   2: **"Boiler"**
   3: **"DHW"**
   4: **"Solar"**
   5: **"Heating circuit 1"**
   6: **"All codes std device"**
   In this group, all coding addresses are displayed in ascending order.
   Confirm selected category with **OK**.

5. Select coding address with ▲/▼.

6. Set value according to the following tables with ▲/▼ and confirm with **OK**.

7. **If you want to reset all codes to their delivered condition:**
   Select **"7"** with ▶ and confirm with **OK**.
   When "⊣⊢" flashes, confirm with **OK**.

   Note
   This also resets codes at coding level 1.

General/group "1"

Select **"General"** for weather-compensated control units (see page 80).
Select **"1"** for constant temperature control units (see page 80).

Coding

Coding in the delivered condition		Possible change	
00:1	System version 1: One heating circuit without mixer A1 (heating circuit 1), without DHW heating	00:2 to 00:10	For system schemes, see the following table:

Value address 00: ...	System version	Description
2	1	One heating circuit without mixer A1 (heating circuit 1), with DHW heating (code is adjusted automatically)
3	2.3	One heating circuit with mixer M2 (heating circuit 2), without DHW heating
4	2.3	One heating circuit with mixer (heating circuit 2), with DHW heating
5	4	One heating circuit without mixer A1 (heating circuit 1) and one heating circuit with mixer M2 (heating circuit 2), without DHW heating (code is adjusted automatically)

General/group "1" (cont.)

Value address 00: ...	System version	Description
6	4	One heating circuit without mixer A1 (heating circuit 1) and one heating circuit with mixer M2 (heating circuit 2), with DHW heating (code is adjusted automatically)
7	4	One heating circuit with mixer M2 (heating circuit 2) and one heating circuit with mixer M3 (heating circuit 3), without DHW heating
8	4	One heating circuit with mixer M2 (heating circuit 2) and one heating circuit with mixer M3 (heating circuit 3), with DHW heating
9	4	One heating circuit without mixer A1 (heating circuit 1), one heating circuit with mixer M2 (heating circuit 2) and one heating circuit with mixer M3 (heating circuit 3), without DHW heating (code is adjusted automatically)
10	4	One heating circuit without mixer A1 (heating circuit 1), one heating circuit with mixer M2 (heating circuit 2) and one heating circuit with mixer M3 (heating circuit 3), with DHW heating (code is adjusted automatically)

Coding in the delivered condition		Possible change	
11:≠9	No access to the coding addresses for the combustion controller parameters	11:9	Access open to the coding addresses for the combustion controller parameters
25:0	Without outside temperature sensor (for constant temperature control units)	25:1	With outside temperature sensor (automatic recognition)
2A:0	Without wireless outside temperature sensor	2A:1	With wireless outside temperature sensor (automatic recognition)
		2A:2	Wireless outside temperature sensor not used
2d:1	With flow sensors (do not adjust)		
32:0	Without extension AM1	32:1	With extension AM1 (automatic recognition)
33:1	Function output A1 at extension AM1: Heating circuit pump	33:0	Function output A1: DHW circulation pump

General/group "1" (cont.)

Coding in the delivered condition		Possible change	
		33:2	Function output A1: Circulation pump for cylinder heating
34:0	Function output A2 at extension AM1: DHW circulation pump	34:1	Function output A2: Heating circuit pump
		34:2	Function output A2: Circulation pump for cylinder heating
35:0	Without extension EA1	35:1	With extension EA1 (automatic recognition)
36:0	Function, output 157 at extension EA1: Fault message	36:1	Function output 157: Feed pump
		36:2	Function output 157: DHW circulation pump
39:2	Function output 21: Circulation pump for cylinder heating	39:0	Function output 21: DHW circulation pump
		39:1	Function output 21: Heating circuit pump
3A:0	Function input DE1 at extension EA1: Not assigned	3A:1	Function input DE1: Heating program - changeover
		3A:2	Function input DE1: External demand with set flow temperature. Flow temperature setting: Coding address 9b. Internal circulation pump function: Coding address 3F
		3A:3	Function input DE1: External blocking. Internal circulation pump function: Coding address 3E
		3A:4	Function input DE1: External blocking with fault message input Internal circulation pump function: Coding address 3E
		3A:5	Function input DE1: Fault message input

Service

General/group "1" (cont.)

Coding in the delivered condition		Possible change	
		3A:6	Function input DE1: Brief operation, DHW circulation pump (pushbutton function). DHW circulation pump runtime adjustment: Coding address 3d
3b:0	Function input DE2 at extension EA1: Not assigned	3b:1	Function input DE2: Heating program - changeover
		3b:2	Function input DE2: External demand with set flow temperature. Flow temperature setting: Coding address 9b. Internal circulation pump function: Coding address 3F
		3b:3	Function input DE2: External blocking. Internal circulation pump function: Coding address 3E
		3b:4	Function input DE2: External blocking with fault message input Internal circulation pump function: Coding address 3E
		3b:5	Function input DE2: Fault message input
		3b:6	Function input DE2: Brief operation, DHW circulation pump (pushbutton function). DHW circulation pump runtime adjustment: Coding address 3d
3C:0	Function input DE3 at extension EA1: Not assigned	3C:1	Function input DE3: Heating program - changeover

General/group "1" (cont.)

Coding in the delivered condition		Possible change	
		3C:2	Function input DE3: External demand with set flow temperature. Flow temperature setting: Coding address 9b. Internal circulation pump function: Coding address 3F
		3C:3	Function input DE3: External blocking. Internal circulation pump function: Coding address 3E
		3C:4	Function input DE3: External blocking with fault message input Internal circulation pump function: Coding address 3E
		3C:5	Function input DE3: Fault message input
		3C:6	Function input DE3: Brief operation, DHW circulation pump (pushbutton function). DHW circulation pump runtime adjustment: Coding address 3d
3d:5	DHW circulation pump runtime for brief operation: 5 min	3d:1 to 3d:60	DHW circulation pump runtime adjustable from 1 to 60 min
3E:0	Boiler circuit pump stays in control mode on "External blocking" signal	3E:1	Boiler circuit pump is stopped on "External blocking" signal
		3E:2	Boiler circuit pump is started on "External blocking" signal
3F:0	Boiler circuit pump stays in control mode on "External demand" signal	3F:1	Boiler circuit pump is stopped on "External demand" signal

General/group "1" (cont.)

Coding in the delivered condition		Possible change	
		3F:2	Boiler circuit pump is started on "External demand" signal
4b:0	Function input 96: Room thermostat (Vitotrol 100) for constant temperature control	4b:1	External demand
		4b:2	External blocking
51:0	System with low loss header: Boiler circuit pump is always started when there is a heat demand	51:1	System with low loss header: When there is heat demand, the boiler circuit pump will only be started if the burner is running. Circulation pump is switched off when run-on time expires.
		51:2	System with heating water buffer cylinder: When there is heat demand, the boiler circuit pump will only be started if the burner is running. Circulation pump is switched off when run-on time expires.
52:0	Without flow temperature sensor for low loss header	52:1	With flow temperature sensor for low loss header (automatic recognition)
53:1	Function connection 28 of the internal extension: DHW circulation pump	53:0	Function connection 28: Central fault message
		53:2	Function connection 28: External heating circuit pump (heating circuit 1)
		53:3	Function connection 28: External circulation pump for cylinder heating
54:0	Without solar thermal system	54:1	With Vitosolic 100 (automatic recognition)
		54:2	With Vitosolic 200 (automatic recognition)

5623 520 GB

General/group "1" (cont.)

Coding in the delivered condition		Possible change	
		54:3	With solar control module SM1 without auxiliary function (automatic recognition)
		54:4	With solar control module SM1 with auxiliary function, e.g. central heating backup (automatic recognition)
6E:50	No correction of measured outside temperature	6E:0 to 6E:100	Outside temperature correction in 0.1 K steps 0 to 49 = -5 K to -0.1 K 51 to 100 = 0.1 K to 5 K
76:0	Without communication module	76:1	With LON communication module (recognised automatically; only for weather-compensated control units)
		76:2	With cascade communication module (recognised automatically; only for constant temperature control units)
77:1	LON subscriber number (only for weather-compensated control units)	77:2 to 77:99	LON subscriber number, adjustable from 1 to 99: 1 - 4 = Boiler 5 = Cascade 10 - 97 = Vitotronic 200-H 98 = Vitogate 99 = Vitocom ***Note*** *Allocate each number only* ***once****.*
79:1	With LON communication module: Control unit is fault manager (only for weather-compensated control units)	79:0	Control unit is not fault manager

General/group "1" (cont.)

Coding in the delivered condition		Possible change	
7b:1	With LON communication module: Control unit transmits the time (only for weather-compensated control units)	7b:0	Does not transmit time
7F:1	Detached house (only for weather-compensated control units)	7F:0	Apartment building Separate adjustment of holiday program and time program for DHW heating possible.
80:6	If a fault occurs for at least 30 s, a fault message is displayed	80:0	Immediate fault message
		80:2 to 80:199	Minimum fault duration until fault message occurs, adjustable from 10 s to 995 s; 1 step ≙ 5 s
81:1	Automatic summer/wintertime changeover	81:0	Manual summer/wintertime changeover
		81:2	Use of the radio clock receiver (automatic recognition)
		81:3	With LON communication module: The control unit receives the time
82:0	Operation with natural gas	82:1	Operation with LPG (only adjustable if coding address 11:9 has been set)
88:0	Temperature display in °C (Celsius)	88:1	Temperature display in °F (Fahrenheit)
8A:175	Do not adjust.		
8F:0	Operation in the standard menu and extended menu enabled. ***Note*** *The respective code is only activated when you exit the service menu.*	8F:1	Operation in the standard menu **and** extended menu blocked. Emissions test mode can be enabled.
		8F:2	Operation enabled in the standard menu; blocked in the extended menu. Emissions test mode can be enabled.

General/group "1" (cont.)

Coding in the delivered condition		Possible change	
90:128	Time constant for calculating the adjusted outside temperature 21.3 h	90:1 to 90:199	Fast (low values) or slow (high values) matching of the flow temperature, subject to the set value when the outside temperature changes; 1 step ≙ 10 min
94:0	Without Open Therm extension	94:1	With Open Therm extension (automatic recognition)
95:0	Without Vitocom 100 communication interface	95:1	With Vitocom 100 communication interface (automatic recognition)
97:0	With LON communication module: The outside temperature of the sensor connected to the control unit is utilised internally (only for weather-compensated control units)	97:1	Control unit receives outside temperature
		97:2	Control unit transmits the outside temperature to the Vitotronic 200-H
98:1	Viessmann system number (in conjunction with monitoring several systems via Vitocom 300)	98:1 to 98:5	System number adjustable from 1 to 5
99:0	Do not adjust		
9A:0	Do not adjust		
9b:70	Set flow temperature for external demand 70 °C	9b:0 to 9b:127	Set flow temperature for external demand adjustable from 0 to 127 °C (limited by boiler-specific parameters)
9C:20	Monitoring LON subscribers.	9C:0	No monitoring
		9C:5 to	Time adjustable from 5 to 60 min

General/group "1" (cont.)

Coding in the delivered condition		Possible change	
	If a subscriber fails to respond, the values specified inside the control unit will be used after 20 min. Only then will a fault message be issued. (only for weather-compensated control units)	9C:60	
9F:8	Differential temperature 8 K; only in conjunction with mixer circuit (only for weather-compensated control units)	9F:0 to 9F:40	Differential temperature adjustable from 0 to 40 K

Boiler/group "2"

Select **"Boiler"** for weather-compensated control units (see page 80).
Select **"2"** for constant temperature control units (see page 80).

Coding

Coding in the delivered condition		Possible change	
01:1	Single boiler system (only for constant temperature control units)	01:2	Multi boiler system with Vitotronic 300-K
04:1	Minimum burner pause subject to the boiler load (specified by boiler coding card)	04:0	Minimum burner pause set permanently (specified by boiler coding card)
06:...	Maximum limit of the boiler water temperature, specified in °C by the boiler coding card	06:20 to 06:127	Maximum limit of the boiler water temperature within the ranges specified by the boiler
07:1	Boiler number in multi boiler systems (only for constant temperature control units)	07:2 to 07:8	Boiler number 2 to 8 in multi boiler systems

Boiler/group "2" (cont.)

Coding in the delivered condition		Possible change	
08:...	Maximum burner heating output in kW in the case of a multi boiler system	08:0 to 08:199	Maximum burner heating output adjustable from 0 to 199 kW (limited by boiler-specific parameters) in steps of 1 kW
0d:0	Do not adjust		
0E:0	Do not adjust		
13:1	Do not adjust		
14:1	Do not adjust		
15:1	Do not adjust		
21:0	No service interval (hours run) selected	21:1 to 21:100	Number of hours run before the burner should be serviced is adjustable from 100 to 10,000 h One adjusting step ≙ 100 h
23:0	No time interval for burner service	23:1 to 23:24	Interval adjustable from 1 to 24 months
24:0	No **"Service"** display	24:1	**"Service"** display (the address is automatically set and must be manually reset after a service has been carried out)
28:0	No burner interval ignition	28:1 to 28:24	Interval adjustable from 1 h to 24 h. The burner is force-started once every 30 s (only when operating with LPG).
2E:0	Do not adjust		
2F:0	Venting program/fill program disabled	2F:1	Venting program enabled
		2F:2	Fill program enabled
30:3	Boiler circuit pump speed controlled via 0-10 V interface (do not adjust)		
38:0	Status burner control unit: Operational (no fault)	38:≠0	Status burner control unit: Faults

DHW/group "3"

Select **"DHW"** for weather-compensated control units (see page 80).
Select **"3"** for constant temperature control units (see page 80).

Coding

Coding in the delivered condition		Possible change	
56:0	Set DHW temperature adjustable from 10 to 60 °C	56:1	Set DHW temperature adjustable from 10 to over 60 °C ***Note*** *Maximum value subject to boiler coding card.* *Observe the max. permissible DHW temperature.*
58:0	Without auxiliary function for DHW heating	58:10 to 58:60	Input of a second set DHW temperature, adjustable from 10 to 60 °C (observe coding addresses "56" and "63")
59:0	Cylinder heating: Starting point -2.5 K Stopping point +2.5 K	59:1 to 59:10	Starting point adjustable from 1 to 10 K below the set value
5b:0	DHW cylinder directly connected to the boiler	5b:1	DHW cylinder connected downstream of the low loss header
5E:0	Circulation pump for cylinder heating stays in control mode at signal "External blocking"	5E:1	Circulation pump for cylinder heating stops at signal "External blocking"
		5E:2	Circulation pump for cylinder heating starts at signal "External blocking"
5F:0	Circulation pump for cylinder heating stays in control mode at signal "External demand"	5F:1	Circulation pump for cylinder heating stops at signal "External demand"
		5F:2	Circulation pump for cylinder heating starts at signal "External demand"

DHW/group "3" (cont.)

Coding in the delivered condition		Possible change	
60:20	During DHW heating, the boiler water temperature is max. 20 K higher than the set DHW temperature	60:5 to 60:25	The differential between the boiler water temperature and the set DHW temperature is adjustable from 5 to 25 K
62:2	Circulation pump with 2 min run-on time after cylinder heating	62:0	Circulation pump without run-on
		62:1 to 62:15	Run-on time adjustable from 1 to 15 min
63:0	Without auxiliary function for DHW heating (only for constant temperature control units)	63:1	Auxiliary function: 1 x daily
		63:2 to 63:14	Every 2 days to every 14 days
		63:15	2 x daily
65:0	Do not adjust.		
67:40	For solar DHW heating: Set DHW temperature 40 °C. Reheating is suppressed above the selected set temperature (boiler is only connected as backup if the rise in cylinder temperature is too low).	67:0 to 67:95	Set DHW temperature adjustable from 0 to 95 °C (limited by boiler-specific parameters)
6F:...	Maximum output for DHW heating in %, specified by the boiler coding card	6F:0 to 6F:100	Max. output for DHW heating adjustable from min. output to 100 %
71:0	DHW circulation pump: "ON" in accordance with the time program (only for weather-compensated control units)	71:1	"OFF" during DHW heating to set value 1
		71:2	"ON" during DHW heating to set value 1
72:0	DHW circulation pump: "ON" in accordance with the time program (only for weather-compensated control units)	72:1	"OFF" during DHW heating to set value 2
		72:2	"ON" during DHW heating to set value 2

DHW/group "3" (cont.)

Coding in the delivered condition		Possible change	
73:0	DHW circulation pump: "ON" in accordance with the time program (only for weather-compensated control units)	73:1 to 73:6	"ON" from once per hour for 5 min up to 6 times per hour for 5 min during the time program
		73:7	Constantly "ON"

Solar/group "4"

Select **"Solar"** for weather-compensated control units (see page 80).
Select **"4"** for constant temperature control units (see page 80).

Note
The solar group is only displayed if a solar control module, type SM1, is connected.

Coding

Coding in the delivered condition		Possible change	
00:8	Start temperature differential for solar circuit pump 8 K .	00:2 to 00:30	Start temperature differential adjustable from 2 to 30 K.
01:4	Stop temperature differential for solar circuit pump 4 K.	01:1 to 01:29	Stop temperature differential adjustable from 1 to 29 K.
02:0	Solar circuit pump is not speed-controlled.	02:1	Solar circuit pump is speed-controlled with wave packet control.
		02:2	Solar circuit pump is speed-controlled with PWM control.
03:10	Temperature differential for the start of the speed control 10 K.	03:5 to 03:20	Temperature differential adjustable from 5 to 20 K.
04:4	Controller amplification of the speed control 4 %/K.	04:1 to 04:10	Controller amplification adjustable from 1 to 10 %/K.
05:10	Minimum speed of the solar circuit pump 10 % of the maximum speed.	05:2 to 05:100	Minimum speed of the solar circuit pump is adjustable from 2 to 100 %.

Solar/group "4" (cont.)

Coding in the delivered condition		Possible change	
06:75	Maximum speed of the solar circuit pump 75 % of the maximum possible speed.	06:1 to 06:100	Maximum speed of the solar circuit pump is adjustable from 1 to 100 %.
07:0	Interval function of the solar circuit pump switched off.	07:1	Interval function of the solar circuit pump switched on. To capture the collector temperature more accurately, the solar circuit pump starts for short cycles.
08:60	Set DHW temperature (maximum cylinder temperature) 60 °C.	08:10 to 08:90	Set DHW temperature adjustable from 10 to 90 °C.
09:130	Maximum collector temperature (to protect the system components) 130 °C.	09:20 to 09:200	Temperature adjustable from 20 to 200 °C.
0A:5	Temperature differential for stagnation time reduction (reduction in the speed of the solar circuit pump to protect system components and heat transfer medium) 5 K.	0A:0	Stagnation time reduction is disabled.
		0A:1 to 0A:40	Temperature differential adjustable from 1 to 40 K.
0b:0	Frost protection function for solar circuit switched off.	0b:1	Frost protection function for solar circuit switched on (not required with Viessmann heat transfer medium).
0C:1	Delta T monitoring switched on. No flow rate captured in the solar circuit, or flow rate too low.	0C:0	Delta T monitoring switched off.
0d:1	Night circulation monitoring switched on. Unintentional flow rate is captured in the solar circuit (e.g. at night).	0d:0	Night circulation monitoring switched off.

Solar/group "4" (cont.)

Coding in the delivered condition		Possible change	
0E:1	Heat statement in conjunction with Viessmann heat transfer medium.	0E:2	Never adjust.
		0E:0	No heat statement.
0F:70	Solar circuit flow rate at the maximum pump speed 7 l/min.	0F:1 to 0F:255	Flow rate adjustable from 0.1 to 25.5 l/min. 1 step ≙ 0.1 l/min
10:0	Target temperature control switched off (see coding address "11").	10:1	Target temperature control switched on.
11:50	Set solar DHW temperature 50 °C. ■ Target temperature control switched on (code "10:1"): Temperature at which the solar heated water in the DHW cylinder is to be stratified. ■ Code "20:9" (heating of two DHW cylinders) is selected: When one DHW cylinder reaches its set DHW temperature, the second DHW cylinder is heated.	11:10 to 11:90	The set solar DHW temperature is adjustable from 10 to 90 °C.
12:20	Minimum collector temperature (minimum start temperature for the solar circuit pump) 20 °C.	12:0	No minimum limit enabled.
		12:1 to 12:90	Minimum collector temperature adjustable from 1 to 90 °C.
20:0	No extended control functions enabled.	20:1	Additional function for DHW heating.
		20:2	Differential temperature control 2.
		20:3	Differential temperature control 2 and auxiliary function.
		20:4	Differential temperature control 2 for central heating backup.
		20:5	Thermostat function.

Solar/group "4" (cont.)

Coding in the delivered condition		Possible change	
		20:6	Thermostat function and auxiliary function.
		20:7	Solar heating via external heat exchanger without additional temperature sensor.
		20:8	Solar heating via external heat exchanger with additional temperature sensor.
		20:9	Solar heating of two DHW cylinders.
22:8	Start temperature differential with central heating backup (code "20:4" must be selected) 8 K.	22:2 to 22:30	Start temperature differential adjustable from 2 to 30 K.
23:4	Shutdown temperature differential with central heating backup (code "20:4" must be selected) 4 K.	23:2 to 23:30	Shutdown temperature differential adjustable from 1 to 29 K.
24:40	Start temperature for thermostat function (code "20:5" or "20:6" must be selected) 40 °C.	24:0 to 24:100	Start temperature for thermostat function adjustable from 0 to 100 K.
25:50	Shutdown temperature for thermostat function (code "20:5" or "20:6" must be selected) 50 °C.	25:0 to 25:100	Shutdown temperature for thermostat function adjustable from 0 to 100 K.
26:1	Priority for DHW cylinder 1 **with** alternate heating. (Code "20:9" must be selected).	26:0	Priority for DHW cylinder 1 **without** alternate heating.
		26:2	Priority for DHW cylinder 2 **without** alternate heating.
		26:3	Priority for DHW cylinder 2 **with** alternate heating.
		26:4	Alternate heating without priority for either DHW cylinder.
27:15	Alternate heating time 15 min.	27:5 to 27:60	The alternate heating time is adjustable from 5 to 60 min.

Solar/group "4" (cont.)

Coding in the delivered condition		Possible change	
	The DHW cylinder without priority is heated at most for the duration of the set alternate heating time if the DHW cylinder with priority is heated up.		
28:3	Alternate pause time 3 min. After the selected alternate heating time for the DHW cylinder without priority has expired, the rise in collector temperature is captured during the alternate pause time.	28:1 to 28:60	The alternate pause time is adjustable from 1 to 60 min.

Heating circuit 1, heating circuit 2, heating circuit 3/group "5"

Select **"Heating circuit ..."** for weather-compensated control units (see page 80).
Select **"5"** for constant temperature control units (see page 80).

Coding

Coding in the delivered condition		Possible change	
A0:0	Without remote control	A0:1	With Vitotrol 200A/200RF (automatic recognition)
		A0:2	With Vitotrol 300A/300RF or Vitohome 300 (automatic recognition)
A1:0	All possible settings at the remote control can be accessed	A1:1	Only party mode can be set at the remote control (only for Vitotrol 200 and 200 RF)
A2:2	Cylinder priority applicable to heating circuit pump and mixer	A2:0	Without cylinder priority applied to heating circuit pump and mixer
		A2:1	Cylinder priority only applicable to mixer

Heating circuit 1, heating circuit 2, heating… (cont.)

Coding in the delivered condition		Possible change	
		A2:3 to A2:15	Reduced priority applied to mixer (the heating circuit receives a reduced amount of energy)
A3:2	Outside temperature below 1 °C: Heating circuit pump "ON" Outside temperature above 3 °C: Heating circuit pump "OFF"	A3:-9 to A3:15	Heating circuit pump "ON/ OFF" (see following table)

! **Please note**
When selecting a value below 1 °C, there is a risk of pipes outside the thermal envelope of the building freezing up.
The standby mode in particular should be taken into consideration, e.g. during holidays.

Parameter address A3:...	Heating circuit pump "On"	"Off"
-9	-10 °C	-8 °C
-8	-9 °C	-7 °C
-7	-8 °C	-6 °C
-6	-7 °C	-5 °C
-5	-6 °C	-4 °C
-4	-5 °C	-3 °C
-3	-4 °C	-2 °C
-2	-3 °C	-1 °C
-1	-2 °C	0 °C
0	-1 °C	1 °C
1	0 °C	2 °C
2 to 15	1 °C to 14 °C	3 °C to 16 °C

Coding in the delivered condition		Possible change	
A4:0	With frost protection (only for weather-compensated control units).	A4:1	No frost protection; this setting is only possible if code "A3:-9" has been selected.

Heating circuit 1, heating circuit 2, heating… (cont.)

Coding in the delivered condition		Possible change	
			Note *"Important" observe for code "A3".*
A5:5	With heating circuit pump logic function (economy mode): Heating circuit pump "OFF" when the outside temperature (AT) is 1 K higher than the set room temperature (RT_{set}) AT > RT_{set} + 1 K (only for weather-compensated control units)	A5:0	Without heating circuit pump logic function
		A5:1 to A5:15	With heating circuit pump logic function: Heating circuit pump "OFF"; see following table

Parameter address A5:...	With heating circuit pump logic function: Heating circuit pump "OFF"
1	AT > RT_{set} + 5 K
2	AT > RT_{set} + 4 K
3	AT > RT_{set} + 3 K
4	AT > RT_{set} + 2 K
5	AT > RT_{set} + 1 K
6	AT > RT_{set}
7 to 15	AT > RT_{set} - 1 K AT > RT_{set} - 9 K

Heating circuit 1, heating circuit 2, heating… (cont.)

Coding in the delivered condition		Possible change	
A6:36	Extended economy function **disabled** (only for weather-compensated control units)	A6:5 to A6:35	Extended economy function enabled, i.e. the burner and heating circuit pump will stop and the mixer close at a variable value, adjustable between 5 and 35 °C plus 1 °C. The base value is the adjusted outside temperature. This value is based on the actual outside temperature and a time constant, which takes the cooling down of an average building into consideration.
A7:0	Without mixer economy function (only for a weather-compensated control unit and heating circuit with mixer)	A7:1	With mixer economy function (extended heating circuit pump logic): Heating circuit pump also "OFF": ■ If the mixer has been attempting to close for longer than 20 min. Heating circuit pump "ON": ■ If the mixer changes to control function ■ If there is a risk of frost
A8:1	Heating circuit with mixer creates a demand for the boiler circuit pump (only for weather-compensated control units)	A8:0	Heating circuit with mixer creates no demand for the boiler circuit pump
A9:7	With pump idle time: Heating circuit pump "OFF" if the set value is altered through a change in operating mode or through a change in the set room temperature (only for weather-compensated control units)	A9:0	Without pump idle time
		A9:1 to A9:15	With pump idle time, adjustable from 1 to 15. The higher the value, the longer the pump idle time.

Service

Heating circuit 1, heating circuit 2, heating… (cont.)

Coding in the delivered condition		Possible change	
b0:0	With remote control: Heating mode/reduced mode: weather-compensated (only for weather-compensated control units; only change the code for the heating circuit with mixer)	b0:1	Heating mode: weather-compensated Reduced mode: with room temperature hook-up
		b0:2	Heating mode: with room temperature hook-up Reduced mode: weather-compensated
		b0:3	Heating mode/reduced mode: with room temperature hook-up
b2:8	With remote control unit and for the heating circuit, operation with room temperature hook-up must be programmed: Room influence factor 8 (only for weather-compensated control units; change the code only for the heating circuit with mixer)	b2:0	Without room influence
		b2:1 to b2:64	Room influence factor adjustable from 1 to 64. The higher the value, the greater the room influence.
b5:0	With remote control: No room temperature-dependent heating circuit pump logic function (only for weather-compensated control units; only change the code for the heating circuit with mixer)	b5:1 to b5:8	Heating circuit pump logic function, see the following table:

Parameter address b5:...	With heating circuit pump logic function: Heating circuit pump "OFF"	Heating circuit pump "ON"
1	$RT_{actual} > RT_{set} + 5$ K	$RT_{actual} < RT_{set} + 4$ K
2	$RT_{actual} > RT_{set} + 4$ K	$RT_{actual} < RT_{set} + 3$ K
3	$RT_{actual} > RT_{set} + 3$ K	$RT_{actual} < RT_{set} + 2$ K
4	$RT_{actual} > RT_{set} + 2$ K	$RT_{actual} < RT_{set} + 1$ K
5	$RT_{actual} > RT_{set} + 1$ K	$RT_{actual} < RT_{set}$
6	$RT_{actual} > RT_{set}$	$RT_{actual} < RT_{set} - 1$ K

Heating circuit 1, heating circuit 2, heating… (cont.)

Parameter address b5:...	With heating circuit pump logic function: Heating circuit pump "OFF"	Heating circuit pump "ON"
7	$RT_{actual} > RT_{set}$ - 1 K	$RT_{actual} < RT_{set}$ - 2 K
8	$RT_{actual} > RT_{set}$ - 2 K	$RT_{actual} < RT_{set}$ - 3 K

Coding in the delivered condition		Possible change	
C5:20	Electronic minimum flow temperature limit 20 °C (only for weather-compensated control units)	C5:1 to C5:127	Minimum limit adjustable from 1 to 127 °C (limited by boiler-specific parameters)
C6:74	Electronic maximum flow temperature limit 74 °C (only for weather-compensated control units)	C6:10 to C6:127	Maximum limit adjustable from 10 to 127 °C (limited by boiler-specific parameters)
d3:14	Heating curve slope = 1.4	d3:2 to d3:35	Heating curve slope adjustable from 0.2 to 3.5 (see page 58)
d4:0	Heating curve level = 0	d4:–13 to d4:40	Heating curve level adjustable from –13 to 40 (see page 58)
d5:0	The external heating program changeover changes the heating program to "Constant operation with reduced room temperature" or "Standby mode" (only for weather-compensated control units)	d5:1	The external heating program changeover changes to "Constant operation with standard room temperature" (subject to coding address 3A, 3b and 3C)
d6:0	Heating circuit pump stays in control mode at signal "External blocking"	d6:1	Heating circuit pump stops at signal "External blocking" (subject to coding addresses 3A, 3b and 3C)
		d6:2	Heating circuit pump starts at signal "External blocking" (subject to coding addresses 3A, 3b and 3C)
d7:0	Heating circuit pump stays in control mode at signal "External demand"	d7:1	Heating circuit pump stops at signal "External demand" (subject to coding addresses 3A, 3b and 3C)

Service

5623 520 GB

Heating circuit 1, heating circuit 2, heating… (cont.)

Coding in the delivered condition		Possible change	
		d7:2	Heating circuit pump starts at signal "External demand" (subject to coding addresses 3A, 3b and 3C)
d8:0	No heating program changeover via extension EA1	d8:1	Heating program changeover via input DE1 at extension EA1
		d8:2	Heating program changeover via input DE2 at extension EA1
		d8:3	Heating program changeover via input DE3 at extension EA1
E1:1	Do not adjust		
E2:50	With remote control: No display correction for the actual room temperature (only for weather-compensated control units)	E2:0 to E2:49	Display correction –5 K to Display correction –01 K
		E2:51 to E2:99	Display correction +0.1 K to Display correction +4.9 K
E5:0	Do not adjust		
F1:0	Screed drying function disabled (only for weather-compensated control units).	F1:1 to F1:6	Screed drying adjustable in accordance with 6 selectable temperature/time profiles (see page 154)
		F1:15	Constant flow temperature 20 °C
F2:8	Time limit for party mode or external heating program changeover via pushbutton: 8 h (only for weather-compensated control units)[*1]	F2:0	No time limit for party mode[*1]
		F2:1 to F2:12	Time limit adjustable from 1 to 12 h[*1]
F5:12	Run-on time of the boiler circuit pump in heating mode: 12 min (only for constant temperature control units)	F5:0	No boiler circuit pump run-on time
		F5:1 to F5:20	Run-on time of the boiler circuit pump adjustable from 1 to 20 min

*[*1] Party mode ends **automatically** in the "Heating and DHW" program, when the system changes over to operation with standard room temperature.*

Heating circuit 1, heating circuit 2, heating… (cont.)

Coding in the delivered condition		Possible change	
F6:25	In "Only DHW" operating mode, the boiler circuit pump is permanently on (only for constant temperature control units)	F6:0	In "Only DHW" operating mode, the boiler circuit pump is permanently off
		F6:1 to F6:24	In "Only DHW" operating mode, the boiler circuit pump is started 1 to 24 times per day for 10 min each time.
F7:25	In "Standby mode", the boiler circuit pump is permanently on (only for constant temperature control units)	F7:0	In "Standby mode", the boiler circuit pump is permanently off
		F7:1 to F7:24	In "Standby mode", the boiler circuit pump is started 1 to 24 times per day for 10 min each time.
F8:-5	Temperature limit for terminating the reduced mode -5 ºC; see example on page 157. Observe the setting of coding address "A3". (only for weather-compensated control units)	F8:+10 to F8:-60	Temperature limit adjustable from +10 to -60 °C
		F8:-61	Function disabled
F9:-14	Temperature limit for raising the reduced set room temperature -14 ºC; see example on page 157 (only for weather-compensated control units).	F9:+10 to F9:-60	Temperature limit for raising the set room temperature to the value selected for standard mode adjustable from +10 to -60 °C
FA:20	Raising the set boiler water temperature or the set flow temperature when changing from operation with reduced room temperature to operation with standard room temperature, by 20 %. See example on page 158 (only for weather-compensated control units).	FA:0 to	Temperature rise adjustable from 0 to 50 %

Heating circuit 1, heating circuit 2, heating… (cont.)

Coding in the delivered condition		Possible change	
		FA:50	
Fb:30	Duration for raising the set boiler water temperature or the set flow temperature (see coding address "FA") 60 min. See example on page 158 (only for weather-compensated control units).	Fb:0 to Fb:150	Duration adjustable from 0 to 300 min; 1 step ≙ 2 min)

Calling up the service level

Weather-compensated control unit

Press **OK** and ☰ simultaneously for approx. 4 s.

Service menu overview

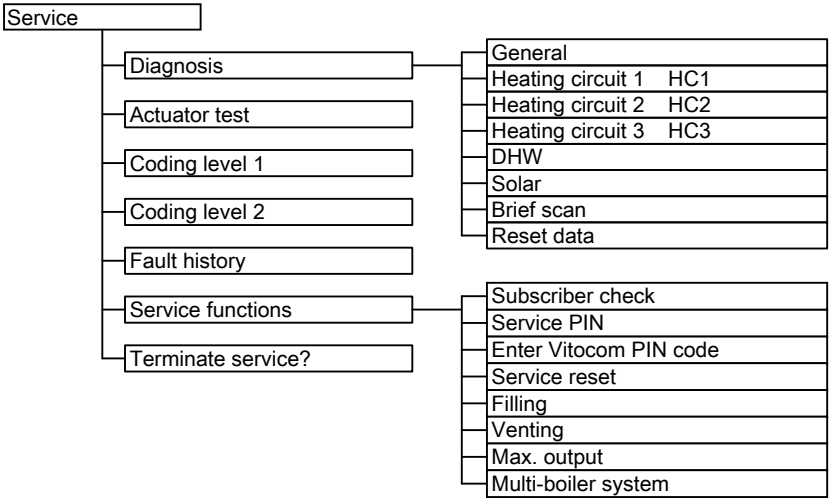

Note
*Do **not** adjust menu item **"Multi-boiler system"**.*
The menu item turns a weather-compensated control unit into a constant temperature control unit.

Exiting the service level

1. Select **"Terminate service?"**.
2. Select **"Yes"**.
3. Confirm with **OK**.

   Note
   The service level is automatically exited after 30 min.

Constant temperature control unit

1. Press **OK** and ☰ simultaneously for approx. 4 s.
   "🔧" flashes on the display.
2. Select required function. See the following pages.

Calling up the service level (cont.)

Exiting the service level

1. Select **"Serv"** ⑦ with ▶.
2. Confirm with **OK**.
   "OFF" flashes.
3. Confirm with **OK**.

   Note
   The service level is automatically exited after 30 min.

Diagnosis

Calling up operating data

- Weather-compensated control unit:
  Operating data can be called up in six areas. See **"Diagnosis"** in the service menu overview.
  Operating data on heating circuits with mixers and solar can only be called up if the components are installed in the system.
  For further information on operating data, see chapter "Brief scan".
- Constant temperature control unit:
  Operating data can be called up in the **"i"** menu.

  Operating instructions

  For further information on operating data, see chapter "Brief scan".

Calling up operating data

Note
"- - -" *appears on the display if a sensor that has been scanned is faulty.*

Weather-compensated control unit

1. Press **OK** and ☰ simultaneously for approx. 4 s.
2. **"Diagnosis"**
3. Select required group, e.g. **"General"**.

Diagnosis (cont.)

Constant temperature control unit

Operating instructions, chapter "Calling up information"

Resetting operating data

Saved operating data (e.g. hours run) can be reset to 0.
The value "Adjusted outside temp" is reset to the actual value.

Weather-compensated control unit

1. Press **OK** and ☰ simultaneously for approx. 4 s.
2. **"Diagnosis"**
3. **"Reset data"**
4. Select required value (e.g. **"Burner starts"**) or **"All details"**.

Constant temperature control unit

Operating instructions, chapter "Calling up information"

Brief scan

In the brief scan, you can call up temperatures, software versions and connected components, for example.

Weather-compensated control unit

1. Press **OK** and ☰ simultaneously for approx. 4 s.
2. **"Diagnosis"**
3. **"Brief scan"**.
4. Press **OK**.
   The display shows 9 lines with 6 fields each.

Diagnosis Brief scan						
1:	1	F	0	A	1	2
2:	0	0	0	0	0	0
3:	0	0	0	0	0	0
4:	0	0	0	0	0	0
Select with ⬍						

Service

Diagnosis (cont.)

For an explanation of the relevant values in the individual lines and fields, see the following table:

Line (brief scan)	Field					
	1	**2**	**3**	**4**	**5**	**6**
1:	System scheme 01 to 10		Software version Control unit		Software version Programming unit	
2:	0	0	Appliance version		Device identification ZE-ID	
3:	0		Number of KM BUS subscribers		Software version, solar control module SM1	
4:	Software version Burner control unit		Type Burner control unit		Burner control unit version	
5:	Internal details for calibration			0	Software version, extension AM1	Software version, extension EA1
6:	0	0	0	Flow rate sensor switching state 1: Flow rate too low or no volumetric flow	0	0
7:	LON Subnet address/system number		LON Node address		0	
8:	LON SBVT configuration	LON Software version communication co-processor	LON Neuron chip software version		Number of LON subscribers	

5623 520 GB

Diagnosis (cont.)

Line (brief scan)	Field					
	1	2	3	4	5	6
9:	**Heating circuit A1 (without mixer)**		**Heating circuit M2 (with mixer)**		**Heating circuit M3 (with mixer)**	
	Remote control 0: without 1: Vitotrol 200/ 200A/ 200 RF 2: Vitotrol 300/ 300A/ 300 RF or Vitohome	Software version Remote control	Remote control 0: without 1: Vitotrol 200/ 200A/ 200 RF 2: Vitotrol 300/ 300A/ 300 RF or Vitohome	Software version Remote control	Remote control 0: without 1: Vitotrol 200/ 200A/ 200 RF 2: Vitotrol 300/ 300A/ 300 RF or Vitohome	Software version Remote control
10: (only for KM BUS circulation pumps)	**Internal circulation pump**		**Heating circuit pump, heating circuit M2**		**Heating circuit pump, heating circuit M3**	
	Variable speed pump 0: Without 1: Wilo 2: Grundfos	Software version, variable speed pump 0: No variable speed pump	Variable speed pump 0: Without 1: Wilo 2: Grundfos	Software version Variable speed pump 0: No variable speed pump	Variable speed pump 0: Without 1: Wilo 2: Grundfos	Software version Variable speed pump 0: No variable speed pump
11:	0	0	Software version Mixer extension heating circuit M2 0: No mixer extension	0	Software version Mixer extension heating circuit M3 0: No mixer extension	0

Service

Diagnosis (cont.)

Constant temperature control unit

1. Press **OK** and ☰ simultaneously for approx. 4 s.
   "🔧" flashes on the display.
2. Confirm with **OK**.
3. Select the required scan with ▲/▼. For example, "b" for "Max. output" (see following table):
4. Confirm selected scan with **OK**.

For explanations of individual scans, see the following table:

Brief scan	Display				
8	8	8	8	8	8
0		System scheme 1 to 2	Software version Control unit		Software version Programming unit
1			Adjusted outside temperature		
3			Set boiler water temperature		
4			Common demand temperature		
5			Set cylinder temperature		
6		Number of KM BUS subscribers		Number of LON subscribers	
7	SNVT configuration 0: Auto 1: Tool	Software version Communications co-processor		Software version LON module	
8		Subnet address/system number		Node address	
9		Burner control unit type		Appliance type	
A	Diverter valve status 0: Not available 1: Heating 2: Central position 3: DHW heating	Flow rate 1: Flow rate too low or no volumetric flow	Max. heating output in %		
b		Boiler coding card (hexadecimal)			
c		Flow rate (specified in l/h)			

5623 520 GB

Diagnosis (cont.)

Brief scan	Display				
8	8	8	8	8	8
C		Version Appliance		Version Burner control unit	
d				0	0
E ①	Software version Solar control module, type SM1	Software version Burner control unit			Software version Cascade module
F ①	Code 53 setting	Internal details for calibration			
	Extension AM1				
F ②	Software version	Output A1 configuration (value corresponds to code 33 setting)	Output A1 switching state 0: OFF 1: ON	Output A2 configuration (value corresponds to code 34 setting)	Output A2 switching state 0: OFF 1: ON
	Extension EA1				
F ③	Output 157 configuration (value corresponds to setting of coding address 36 in group 1 **"General"**)	Output 157 switching state 0: OFF 1: ON	Input DE1 switching state 0: Open 1: Closed	Input DE2 switching state 0: Open 1: Closed	Input DE3 switching state 0: Open 1: Closed
F ④	Software version		External hook-up 0 - 10 V Display in %		
	Solar control module SM1				
F ⑤	Stagnation time of the solar thermal system in h				
F ⑥	Night circulation, solar thermal system (number)				
F ⑦	Differential temperature monitoring				

Service

Diagnosis (cont.)

Brief scan	Display				
8	8	8	8	8	8
F 8				Solar central heating backup 0: Disabled 1: Enabled	Output 22 switching state 0: OFF 1: ON
	Open Therm extension (if installed)				
F 9	Software version	DHW heating status	External hook-up 0 - 10 V Display in %		

Checking outputs (relay test)

Weather-compensated control unit

1. Press **OK** and ☰ simultaneously for approx. 4 s.
2. **"Actuator test"**

The following relay outputs can be controlled subject to system design:

Display		Explanation
All actuators	Off	All actuators are off
Base load	On	Burner operated at minimum output; circulation pump is started
Full load	On	Burner operated at maximum output; circulation pump is started
Output, internal	On	Output 20 active (boiler circuit pump)
Output 21/28	On	Output 21 active (circulation pump for cylinder heating)
Htg circ pump HC2	On	Heating circuit pump output enabled (extension to heating circuit with mixer)
Mixer HC2	Open	"Mixer open" output enabled (extension to heating circuit with mixer)
Mixer HC2	Close	"Mixer close" output enabled (extension to heating circuit with mixer)
Htg circ pump HC3	On	Heating circuit pump output enabled (extension to heating circuit with mixer)

Checking outputs (relay test) (cont.)

Display		Explanation
Mixer HC3	Open	"Mixer open" output enabled (extension to heating circuit with mixer)
Mixer HC3	Close	"Mixer close" output enabled (extension to heating circuit with mixer)
Outp. int. exten. H1	On	Output at internal extension enabled
AM1 output 1	On	Output A1 at extension AM1 enabled
AM1 output 2	On	Output A2 at extension AM1 enabled
EA1 output 1	On	Contact P - S at plug 157 of extension EA1 closed
Solar circuit pump	On	Solar circuit pump output 24 on solar control module SM1 active
Solar circ pmp min	On	Solar circuit pump output on solar control module SM1 switched to minimum speed
Solar circ pmp max	On	Solar circuit pump output on solar control module SM1 switched to maximum speed
SM1 output 22	On	Output 22 on solar control module SM1 active

Constant temperature control unit

1. Press **OK** and ≡ simultaneously for approx. 4 s.
   "🔧" flashes on the display.
2. Select "⚡" with ▶ and confirm with **OK**.
3. Select required actuator (output) with ▲/▼ (see following table):
4. Confirm selected actuator with **OK**. The display shows the number for the activated actuator and "**ON**".

The following actuators (relay outputs) can be controlled subject to system design:

Display	Explanation
0	All actuators are off
1	Burner operated at minimum output; circulation pump is started
2	Burner operated at maximum output; circulation pump is started
3	Output 20 active (boiler circuit pump)
10	Internal extension output enabled
15	Solar circuit pump output 24 on solar control module SM1 active

Checking outputs (relay test) (cont.)

Display	Explanation
16	Solar circuit pump output on solar control module SM1 switched to minimum speed
17	Solar circuit pump output on solar control module SM1 switched to maximum speed
18	Output 22 on solar control module SM1 active
19	Contact P - S at plug 157 of extension EA1 closed
20	Output A1 at extension AM1 enabled
21	Output A2 at extension AM1 enabled
22	Output 21 active (circulation pump for cylinder heating)

Fault display

Weather-compensated control unit

In the event of a fault, red fault indicator Ⓐ flashes. "⚠" flashes on the display and **"Fault"** is shown.

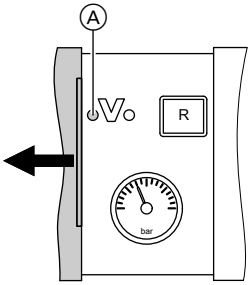

The fault code is displayed with **OK**. For an explanation of the fault code, see the following pages.
For some faults, the type of fault is also displayed in plain text.

Acknowledging a fault

Follow the instructions on the display.

Note
The fault message is transferred to the standard menu.
A fault message facility, if connected, will be switched OFF.
If an acknowledged fault is not remedied, the fault message will be re-displayed the following day and the fault message facility restarted.

Calling up acknowledged faults

Select **"Fault"** in the standard menu.
The current faults will be displayed in a list.

Calling up fault codes from the fault memory (fault history)

The 10 most recent faults (including resolved ones) are saved and can be called up.
Faults are sorted by date.

1. Press **OK** and ☰ simultaneously for approx. 4 s.
2. **"Fault history"**
3. **"Display?"**

Fault display (cont.)

Constant temperature control unit

In the event of a fault, red fault indicator Ⓐ flashes. The two-digit fault code and (subject to the type of fault) "⚠" or "⚠" flash on the programming unit display.

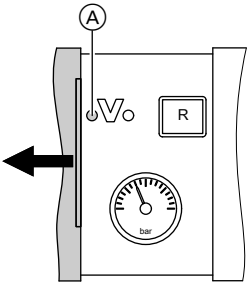

Other current faults can be displayed with ▲/▼. For an explanation of the fault codes, see the following pages.

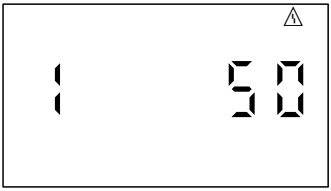

Example: Fault code "50"

Acknowledge a fault

Press **OK**; the standard display is shown again.

A fault message facility, if connected, will be switched OFF.
If an acknowledged fault is not remedied, the fault message will be re-displayed the following day and the fault message facility restarted.

Calling up acknowledged faults

Press **OK** for approx. 4 s.
The 10 most recent faults (including resolved ones) are saved and can be called up.

Calling up fault codes from the fault memory (fault history)

The 10 most recent faults (including those remedied) are saved and can be called up.
Faults are sorted by date.

1. Press **OK** and ☰ simultaneously for approx. 4 s.
2. Select "⚠" and activate fault history with **OK**.
3. Select fault messages with ▲/▼.

Deleting fault history

While the list is displayed, press **OK** until ⊢⊣ flashes. Confirm with **OK**.

Fault codes

Displayed fault code	Const.	Weath.-comp.	System characteristics	Cause	Measures
10	X	X	Regulates as if the outside temperature were 0 °C	Short circuit, outside temperature sensor	Check outside temperature sensor (see page 135).
18	X	X	Regulates as if the outside temperature were 0 °C	Lead break, outside temperature sensor	Check outside temperature sensor (see page 135).
19	X	X	Regulates as if the outside temperature were 0 °C	Communication interruption, outside temperature sensor RF (outside temperature sensor RF, KM BUS to wireless base station, wireless base station or wireless repeater faulty or defective).	Check wireless connection (place outside temperature sensor RF and wireless repeater close to the boiler). Check KM BUS to wireless base station. Log off outside temperature sensor and wireless repeater, then log them on again. Wireless base station Replace outside temperature sensor RF. Replace wireless repeater. Replace wireless base station.
1 A	X	X	Burner blocked	Flow sensor 1 faulty	Replace sensor (see page 138).

Fault codes (cont.)

Displayed fault code	Const.	Weath.-comp.	System characteristics	Cause	Measures
1b	X	X	Burner blocked	Flow sensor 2 faulty	Replace sensor (see page 138).
1F	X	X	Burner blocked	Differential flow rate too large	Clean heat exchanger by flushing.
20	X	X	Regulates without flow temperature sensor (low loss header)	Short circuit, system flow temperature sensor	Check low loss header sensor (see page 136).
28	X	X	Regulates without flow temperature sensor (low loss header)	Lead break, system flow temperature sensor	Check low loss header sensor (see page 136). If no low loss header sensor is connected, set code 52:0.
30	X	X	Burner blocked	Short circuit, boiler water temperature sensor	Check boiler water temperature sensors (see page 136).
38	X	X	Burner blocked	Lead break, boiler water temperature sensor	Check boiler water temperature sensors (see page 136).
40		X	Mixer closes	Short circuit, flow temperature sensor, heating circuit 2 (with mixer)	Check flow temperature sensor (see page 142).
44		X	Mixer closes	Short circuit, flow temperature sensor, heating circuit 3 (with mixer)	Check flow temperature sensor (see page 142).

Fault codes (cont.)

Displayed fault code	Const.	Weath.-comp.	System characteristics	Cause	Measures
48		X	Mixer closes	Lead break, flow temperature sensor, heating circuit 2 (with mixer)	Check flow temperature sensor (see page 142).
4C		X	Mixer closes	Lead break, flow temperature sensor, heating circuit 3 (with mixer)	Check flow temperature sensor (see page 142).
50	X	X	No DHW heating by the boiler	Short circuit, cylinder temperature sensor	Check the cylinder temperature sensor (see page 136).
58	X	X	No DHW heating	No DHW heating by the boiler	Check the cylinder temperature sensor (see page 136).
90	X	X	Control mode	Short circuit, temperature sensor 7	Check sensor 7 on solar control module.
91	X	X	Control mode	Short circuit, temperature sensor 10	Check sensor 10 on solar control module.
92	X	X	No solar DHW heating	Short circuit, collector temperature sensor	Check temperature sensor 6 on solar control module or sensor on the Vitosolic.
93	X	X	Control mode	Short circuit, cylinder temperature sensor	Check temperature sensor at connection S3 to the Vitosolic.
94	X	X	No solar DHW heating	Short circuit, cylinder temperature sensor	Check temperature sensor 5 on solar control module or sensor on the Vitosolic.

Fault codes (cont.)

Displayed fault code	Const.	Weath.-comp.	System characteristics	Cause	Measures
98	X	X	Control mode	Lead break, temperature sensor 7	Check sensor 7 on solar control module.
99	X	X	Control mode	Lead break, temperature sensor 10	Check sensor 10 on solar control module.
9 A	X	X	No solar DHW heating	Lead break, collector temperature sensor	Check temperature sensor 6 on solar control module or sensor on the Vitosolic.
9b	X	X	Control mode	Lead break, cylinder temperature sensor	Check temperature sensor at connection S3 to the Vitosolic.
9C	X	X	No solar DHW heating	Lead break, cylinder temperature sensor	Check temperature sensor 5 on solar control module or sensor on the Vitosolic.
9E	X	X	Control mode	No flow rate in solar circuit or flow rate too low, or temperature limiter has responded	Check solar circuit pump and solar circuit. Acknowledge fault message.
9F	X	X	Control mode	Solar control module or Vitosolic faulty	Replace solar control module or Vitosolic.
A3		X	Burner blocked	Flue gas temperature sensor not positioned correctly.	Install flue gas temperature sensor correctly (see page 139).

Fault codes (cont.)

Displayed fault code	Const.	Weath.-comp.	System characteristics	Cause	Measures
A4		X	Control mode	Max. system pressure exceeded	Check system pressure (max. system pressure 6 bar). Check the function and sizing of the diaphragm expansion vessel. Vent the heating system.
A7		X	Control mode as per delivered condition	Programming unit faulty	Replace programming unit.
b0	X	X	Burner blocked	Short circuit, flue gas temperature sensor	Check flue gas temperature sensor.
b1	X	X	Control mode as per delivered condition	Communication fault, programming unit	Check connections and replace programming unit if required.
b5	X	X	Control mode as per delivered condition	Internal fault	Replace the control unit.
b7	X	X	Burner blocked	Boiler coding card faulty	Plug in boiler coding card or replace if faulty.
b8	X	X	Burner blocked	Lead break, flue gas temperature sensor	Check flue gas temperature sensor.
bA		X	Mixer regulates to 20°C flow temperature	Communication error, extension kit for heating circuit 2 (with mixer)	Check extension kit connections and code.

Fault codes (cont.)

Displayed fault code	Const.	Weath.-comp.	System characteristics	Cause	Measures
bb		X	Mixer regulates to 20°C flow temperature	Communication error, extension kit for heating circuit 3 (with mixer)	Check extension kit connections and code.
bC		X	Control mode without remote control	Communication error, remote control Vitotrol heating circuit 1 (without mixer)	Check connections, cable, coding address "A0" in **"Heating circuit"** group and remote control DIP switches. For wireless remote control units: Check radio path connections, place remote control unit and wireless repeater close to the boiler. Check KM BUS connection to wireless base station. Replace wireless components.

Fault codes (cont.)

Displayed fault code	Const.	Weath.-comp.	System characteristics	Cause	Measures
bd		X	Control mode without remote control	Communication error, remote control Vitotrol heating circuit 2 (with mixer)	Check connections, cable, coding address "A0" in **"Heating circuit"** group and remote control unit setting. For wireless remote control units: Check radio path connections, place remote control unit and wireless repeater close to the boiler. Check KM BUS connection to wireless base station. Replace wireless components.
bE		X	Control mode without remote control	Communication error, remote control Vitotrol heating circuit 3 (with mixer)	Check connections, cable, coding address "A0" in **"Heating circuit"** group and remote control unit setting. For wireless remote control units: Check radio path connections, place remote control unit and wireless repeater close to the boiler. Check KM BUS connection to wireless base station. Replace wireless components.

Fault codes (cont.)

Displayed fault code	Const.	Weath.-comp.	System characteristics	Cause	Measures
bF		X	Control mode	Incorrect LON communication module	Replace LON communication module.
C1	X	X	Control mode	Communication fault, extension EA1	Check connections.
C2	X	X	Control mode	Communication error, solar control module or Vitosolic	Check solar control module or Vitosolic.
C3	X	X	Control mode	Communication fault, extension AM1	Check connections
C4	X	X	Control mode	Communication error, Open Therm extension	Check Open Therm extension.
Cd	X	X	Control mode	Communication error, Vitocom 100 (KM BUS)	Check connections, Vitocom 100 and coding address "95" in group **"General"/1**.
CF		X	Control mode	Communication error, LON communication module	Replace LON communication module
d6	X	X	Control mode	Input DE1 reports a fault at extension EA1	Remove fault at appliance concerned
d7	X	X	Control mode	Input DE2 reports a fault at extension EA1	Remove fault at appliance concerned.

Fault codes (cont.)

Displayed fault code	Const.	Weath.-comp.	System characteristics	Cause	Measures
d8	X	X	Control mode	Input DE3 reports a fault at extension EA1	Remove fault at appliance concerned.
dA		X	Control mode without room influence	Short circuit, room temperature sensor, heating circuit 1 (without mixer)	Check room temperature sensor, heating circuit 1.
db		X	Control mode without room influence	Short circuit, room temperature sensor, heating circuit 2 (with mixer)	Check room temperature sensor, heating circuit 2.
dC		X	Control mode without room influence	Short circuit, room temperature sensor, heating circuit 3 (with mixer)	Check room temperature sensor, heating circuit 3.
dd		X	Control mode without room influence	Lead break, room temperature sensor, heating circuit 1 (without mixer)	Check room temperature sensor for heating circuit 1 and remote control settings.
dE		X	Control mode without room influence	Lead break, room temperature sensor, heating circuit 2 (with mixer)	Check room temperature sensor for heating circuit 2 and remote control settings.
dF		X	Control mode without room influence	Lead break, room temperature sensor, heating circuit 3 (with mixer)	Check room temperature sensor for heating circuit 3 and remote control settings.

Fault codes (cont.)

Displayed fault code	Const.	Weath.-comp.	System characteristics	Cause	Measures
E0		X	Control mode	Fault external LON subscriber	Check connections and LON subscribers.
E1	X	X	Burner in a fault state	Ionisation current too high during calibration	Check gap between ionisation electrode and burner gauze assembly (see page 46). In open flue mode, prevent very dusty conditions for the combustion air. Press reset button **R**.
E2	X	X	Burner in a fault state	Heating water flow rate too low during calibration. Flow limiter caused shutdown.	Ensure adequate circulation volume. Check flow limiter. Remove scaling, blockage. Press reset button **R**.
E3	X	X	Burner in a fault state	Heat transfer too low during calibration. Temperature limiter caused shutdown.	Ensure adequate heat transfer. Press reset button **R**.
E4	X	X	Burner blocked	Fault, supply voltage 24 V	Replace control unit.
E5	X	X	Burner blocked	Fault, flame amplifier	Replace control unit.

Fault codes (cont.)

Displayed fault code	Const.	Weath.-comp.	System characteristics	Cause	Measures
E7	X	X	Burner in a fault state	Ionisation current too low during calibration	Check ionisation electrode: ■ Distance to burner gauze assembly (see page 46) ■ Contamination of electrode ■ Connecting lead and plug-in connections Check flue system; remedy flue gas recirculation if required. Press reset button **R**.
E8	X	X	Burner in a fault state	The ionisation current lies outside the permissible range	Check gas supply (gas pressure and gas flow limiter), gas train and connecting lead. Check allocation of gas type (see page 37). Check ionisation electrode: ■ Distance to burner gauze assembly (see page 46) ■ Contamination of electrode Press reset button **R**.

Fault codes (cont.)

Displayed fault code	Const.	Weath.-comp.	System characteristics	Cause	Measures
EA	X	X	Burner in a fault state	Ionisation current outside permissible range during calibration (deviation from previous level too great)	Check flue system; remedy flue gas recirculation if required. In open flue mode, prevent very dusty conditions for the combustion air. Press reset button **R**. Following several unsuccessful reset attempts, replace boiler coding card and press reset button **R**.
Eb	X	X	Burner in a fault state	Repeated flame loss during calibration	Check gap between ionisation electrode and burner gauze assembly (see page 46). Check allocation of gas type (see page 37). Check flue system; remedy flue gas recirculation if required. Press reset button **R**.
EC	X	X	Burner in a fault state	Parameter fault during calibration	Press reset button **R** or Replace boiler coding card and press reset button **R**.
Ed	X	X	Burner in a fault state	Internal fault	Replace control unit.

5623 520 GB

Fault codes (cont.)

Displayed fault code	Const.	Weath.-comp.	System characteristics	Cause	Measures
EE	X	X	Burner in a fault state	Flame signal is not present or too weak at burner start	Check gas supply (gas pressure and gas flow limiter). Check gas train. Check ionisation electrode and connecting cable. Check ignition: ■ Connecting leads to ignition module and ignition electrode ■ Ignition electrode gap and contamination (see page 46) Check condensate drain. Press reset button **R**.

Fault codes (cont.)

Displayed fault code	Const.	Weath.-comp.	System characteristics	Cause	Measures
EF	X	X	Burner in a fault state	Flame is lost immediately after it has built (during the safety time)	Check gas supply (gas pressure and gas flow limiter). Check flue gas/ventilation air system for flue gas recirculation. Check ionisation electrode (replace if required): ■ Distance to burner gauze assembly (see page 46) ■ Contamination of electrode Press reset button **R**.
F0	X	X	Burner blocked	Internal fault	Replace control unit.
F1	X	X	Burner in a fault state	Flue gas temperature has exceeded limit	Check heating system fill level. Vent the system. Press reset button **R** after flue system has cooled down.
F2	X	X	Burner in a fault state	Boiler water temperature sensor has responded	Check heating system fill level. Check circulation pump. Vent the system. Check boiler water temperature sensor and connecting cables. Press reset button **R**.

Fault codes (cont.)

Displayed fault code	Const.	Weath.-comp.	System characteristics	Cause	Measures
F3	X	X	Burner in a fault state	Flame signal is already present at burner start	Check ionisation electrode and connecting cable. Press reset button **R**.
F6	X	X	Burner in a fault state	Boiler water temperature sensor temperature values vary too widely from one another	Replace boiler water temperature sensors.
F8	X	X	Burner in a fault state	Fuel valve closes too late	Check gas train. Check both control paths. Press reset button **R**.
F9	X	X	Burner in a fault state	Fan speed too low during burner start	Check fan, fan connecting cables and power supply; check fan control. Press reset button **R**.
FA	X	X	Burner in a fault state	Fan not at standstill	Check fan, fan connecting cables and fan control. Press reset button **R**.
FC	X	X	Burner in a fault state	Gas train faulty, faulty modulation valve control or flue gas path blocked	Check gas train. Check flue system. Press reset button **R**.

Fault codes (cont.)

Displayed fault code	Const.	Weath.-comp.	System characteristics	Cause	Measures
Fd	X	X	Burner in a fault state and additional fault b7 is displayed	Boiler coding card is missing	Insert the boiler coding card. Press reset button **R**. Replace control unit if fault persists.
Fd	X	X	Burner in a fault state	Fault, burner control unit	Check ignition electrodes and connecting cables. Check whether a strong interference (EMC) field exists near the appliance. Press reset button **R**. Replace control unit if fault persists.
FE	X	X	Burner blocked or in a fault state	Boiler coding card or main PCB faulty, or incorrect boiler coding card	Press reset button **R**. If the fault persists, check the boiler coding card or replace it or the control unit.
FF	X	X	Burner blocked or in a fault state	Internal fault or reset button **R** blocked	Start the appliance again. Replace the control unit if the appliance will not restart.

Repair

Checking the outside temperature sensor (weather-compensated control unit)

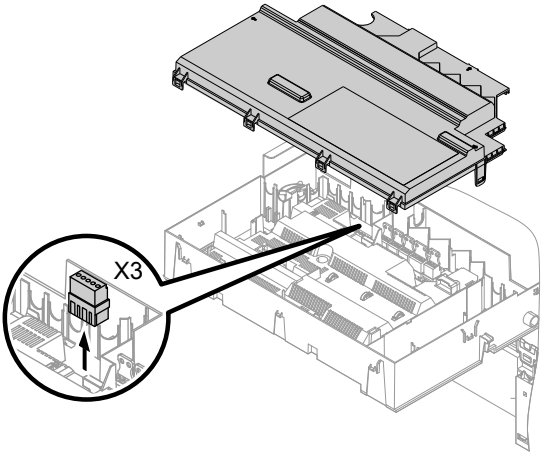

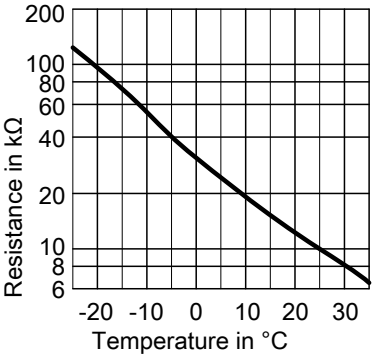

Sensor type: NTC 10 kΩ

1. Pull plug "X3" from the control unit.
2. Test the resistance of the outside temperature sensor across terminals "X3.1" and "X3.2" on the disconnected plug and compare it with the curve.
3. Where actual values deviate severely from the curve values, disconnect the wires at the sensor and repeat test on the sensor itself.
4. Depending on the result, replace the lead or the outside temperature sensor.

Repair (cont.)

Checking the boiler water temperature sensors, cylinder temperature sensor or flow temperature sensor for the low loss header

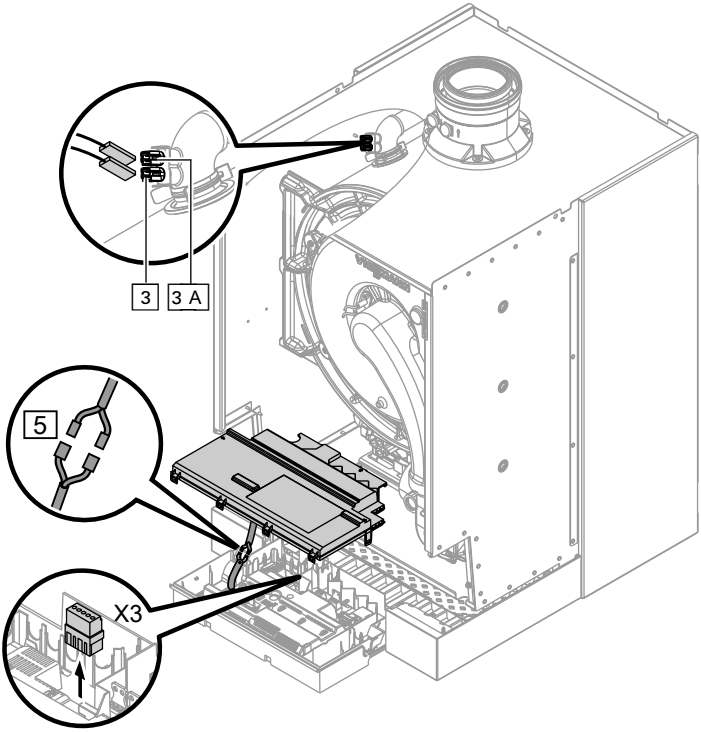

Repair (cont.)

1. ■ **Boiler water temperature sensors**
   Remove lead to boiler water temperature sensor [3] or [3]A and check the resistance.
   ■ **Cylinder temperature sensor**
   Pull plug [5] from the cable harness at the control unit and check the resistance.
   ■ **Flow temperature sensor**
   Pull plug "X3" from the control unit and check the resistance across terminals "X3.4" and "X3.5".

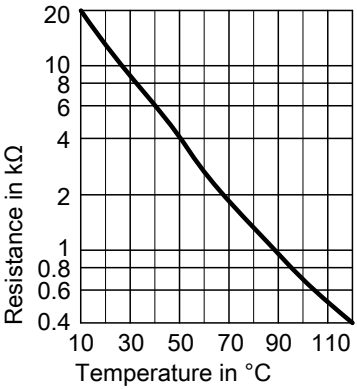

Sensor type: NTC 10 kΩ

2. Check the sensor resistance and compare the actual values with the curve.

3. Replace the sensor in the case of severe deviation.

Danger
The boiler water temperature sensors are immersed in the heating water (risk of scalding).
Drain the boiler before replacing the sensor.

Repair (cont.)

Replacing the flow rate sensor

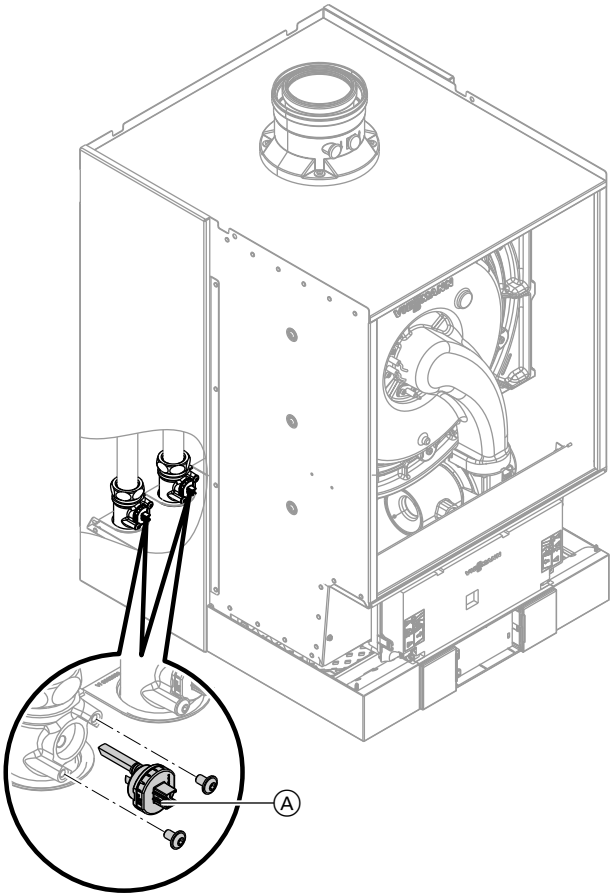

Note
In the event of a fault, both sensors need to be replaced.

1. Drain the boiler on the heating water side.
2. Pull leads from flow rate sensor Ⓐ.
3. Undo screws and remove faulty flow rate sensor Ⓐ.
4. Install new flow rate sensor Ⓐ and secure with the screws.

Repair (cont.)

Checking the flue gas temperature sensor

The flue gas temperature sensor locks out the boiler when the permissible flue gas temperature is exceeded. Reset the interlock after the flue system has cooled down by pressing reset button **R**.

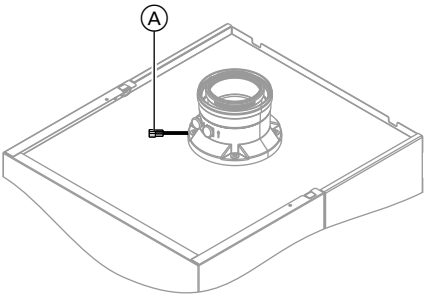

1. Pull leads from flue gas temperature sensor Ⓐ.

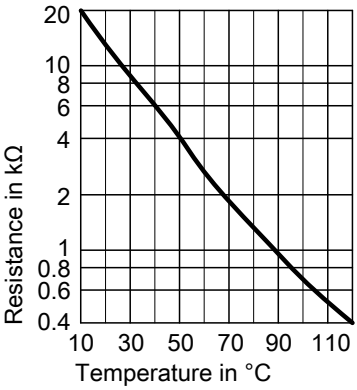

2. Check the sensor resistance and compare it with the curve.
3. Replace the sensor in the case of severe deviation.

Sensor type: NTC 10 kΩ

Fault during commissioning (fault A3)

During commissioning, the control unit checks correct placement of the flue gas temperature sensor. If commissioning is terminated and fault message A3 is displayed:

Repair (cont.)

1. Check whether the flue gas temperature sensor is correctly inserted. See previous diagram.
2. If necessary, correct the position of the flue gas temperature sensor or replace faulty flue gas temperature sensor.
3. Press reset button **R** and repeat commissioning.
   The check is repeated until it is completed successfully.

Checking the fuse

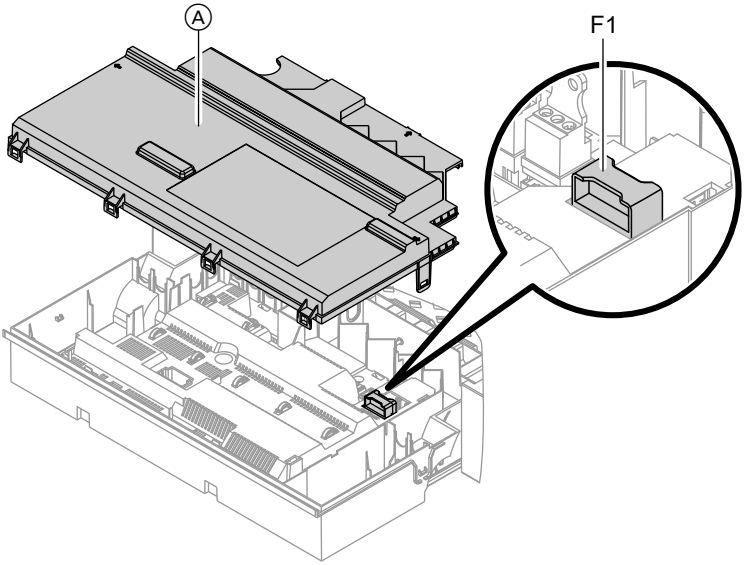

1. Switch off the power.
2. Release the side closures and pivot the control unit down.
3. Remove cover Ⓐ.
4. Check fuse F1 (see connection and wiring diagram).

Repair (cont.)

Extension kit for heating circuit with mixer

Checking the setting of rotary selector S1

The rotary selector on the PCB of the extension kit defines the assignment to the relevant heating circuit.

Heating circuit	Rotary selector S1 setting
Heating circuit with mixer M2 (heating circuit 2)	2 
Heating circuit with mixer M3 (heating circuit 3)	4 

Checking the rotational direction of the mixer motor

After being switched on, the boiler implements a self-test. During this, the mixer is opened and closed again.

Note the rotational direction of the mixer motor during its self-test.
Then set the mixer manually to "Open".

Note
The flow temperature sensor must now capture a higher temperature. If the temperature drops, either the motor is turning in the wrong direction or the mixer set is incorrectly fitted.


Mixer installation instructions

Changing the rotational direction of the mixer motor (if required)

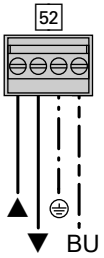

1. Remove the upper casing cover of the extension kit.

Danger
An electric shock can be life-threatening.
Before opening the boiler, disconnect from the mains voltage, for example at the fuse or the mains isolator.

2. At plug 52, swap the cores at terminals "▲" and "▼".

Repair (cont.)

3. Refit the casing cover.

Check flow temperature sensor

Pressure drop curve

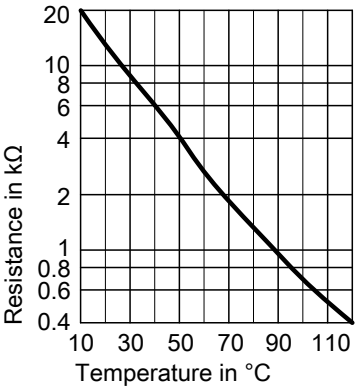

Sensor type: NTC 10 kΩ

1. Pull plug [2] (flow temperature sensor).
2. Check the sensor resistance and compare it with the curve.
   Replace the sensor in the case of severe deviation.

Checking the Vitotronic 200-H (accessories)

The Vitotronic 200-H is connected to the control unit via the LON. To test the connection, carry out a subscriber check at the boiler control unit (see page 62).

Constant temperature control unit

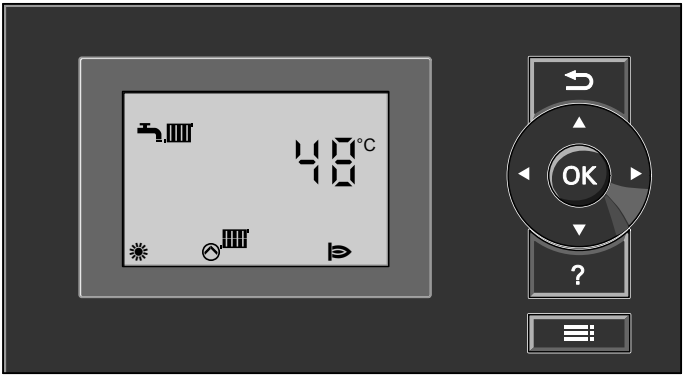

Heating mode

The selected set boiler water temperature will be maintained when a demand is being raised by the room thermostat and the heating program is set to DHW and central heating "".
The boiler water temperature will be maintained at the default frost protection temperature when there is no demand.

The electronic temperature limiter inside the burner control unit limits the boiler water temperature.
Flow temperature setting range: 20 to 74 °C.

DHW heating

The burner and the circulation pump for cylinder heating are started if the cylinder temperature lies 2.5 K below the set cylinder temperature.

In the delivered condition, the set boiler water temperature is 20 K higher than the set DHW temperature (adjustable via coding address "60"). The burner will be switched off and the circulation pump run-on time will begin, if the actual cylinder temperature exceeds the set cylinder temperature by 2.5 K.

Weather-compensated control unit

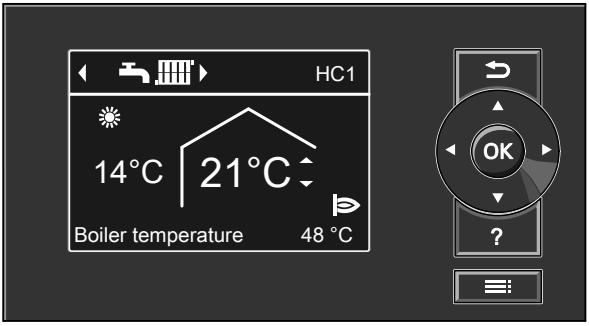

Heating mode

The control unit determines a set boiler water temperature subject to outside temperature or room temperature (if a room temperature-dependent remote control is connected) and to the slope/ level of the heating curve.
The determined set boiler water temperature is transferred to the burner control unit. From the set and actual boiler water temperatures, the burner control unit calculates the modulation level and regulates the burner accordingly.

The electronic temperature limiter inside the burner control unit limits the boiler water temperature.

DHW heating

The burner and the circulation pump for cylinder heating are started if the cylinder temperature lies 2.5 K below the set cylinder temperature.

In the delivered condition, the set boiler water temperature is 20 K higher than the set DHW temperature (adjustable via coding address "60" in group **"DHW"/3**). The burner will be switched off and the circulation pump run-on time will begin, if the actual cylinder temperature exceeds the set cylinder temperature by 2.5 K.

Weather-compensated control unit (cont.)

Boosting DHW heating

This function is activated by specifying a second set DHW temperature via coding address 58 in group **"DHW"** and activating the fourth DHW phase for DHW heating.

Heating is boosted during the periods selected in this time phase.

Internal extensions (accessories)

Internal extension H1

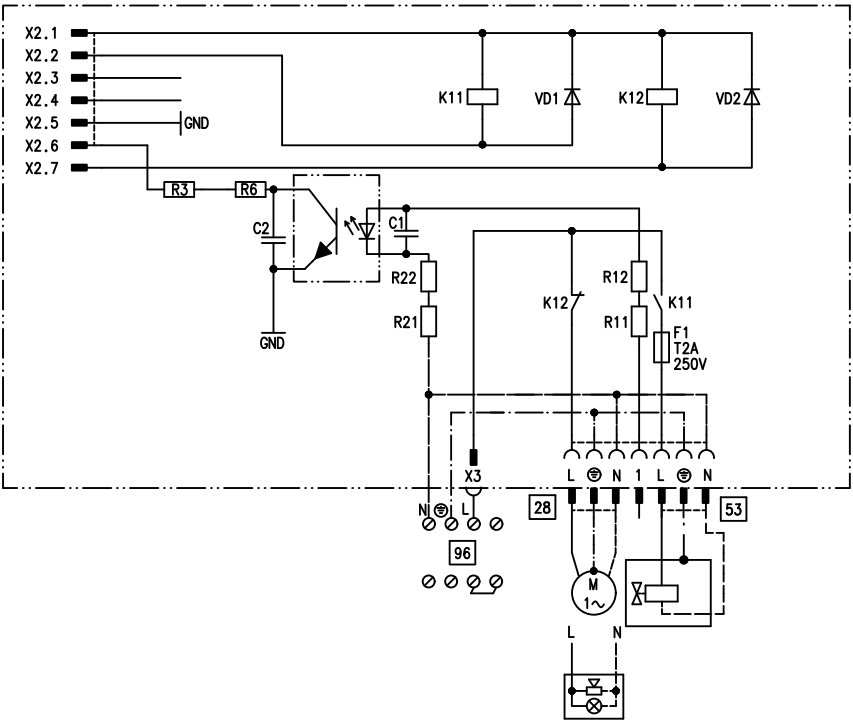

Internal extensions (accessories) (cont.)

The internal extension is integrated into the control unit casing. The following alternative functions can be connected to relay output 28. The function is assigned via coding address "53" in group **"General"**:

- Central fault message (code "53:0")
- DHW circulation pump (code "53:1") (only for weather-compensated operation)
- Heating circuit pump for heating circuit without mixer (code "53:2")
- Circulation pump for cylinder heating (code "53:3")

An external safety valve can be connected to connection 53.

Internal extension H2

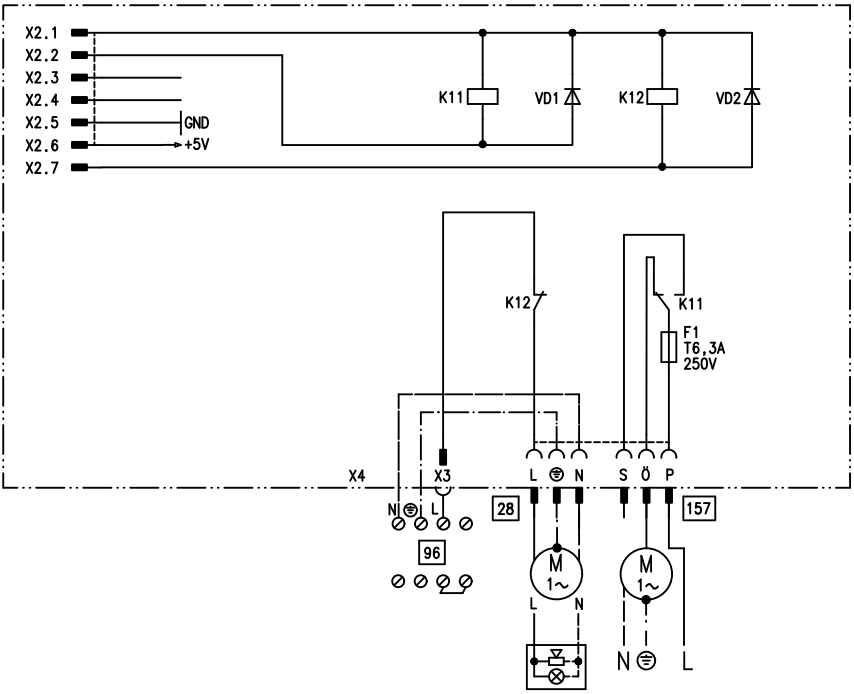

5623 520 GB

Internal extensions (accessories) (cont.)

The internal extension is integrated into the control unit casing. The following alternative functions can be connected to relay output 28. The function is assigned via coding address "53" in group **"General"**:

- Central fault message (code "53:0")
- DHW circulation pump (code "53:1") (only for weather-compensated operation)
- Heating circuit pump for heating circuit without mixer (code "53:2")
- Circulation pump for cylinder heating (code 53:3)

An extractor fan can be switched off via connection 157 when the burner starts.

External extensions (accessories)

Extension AM1

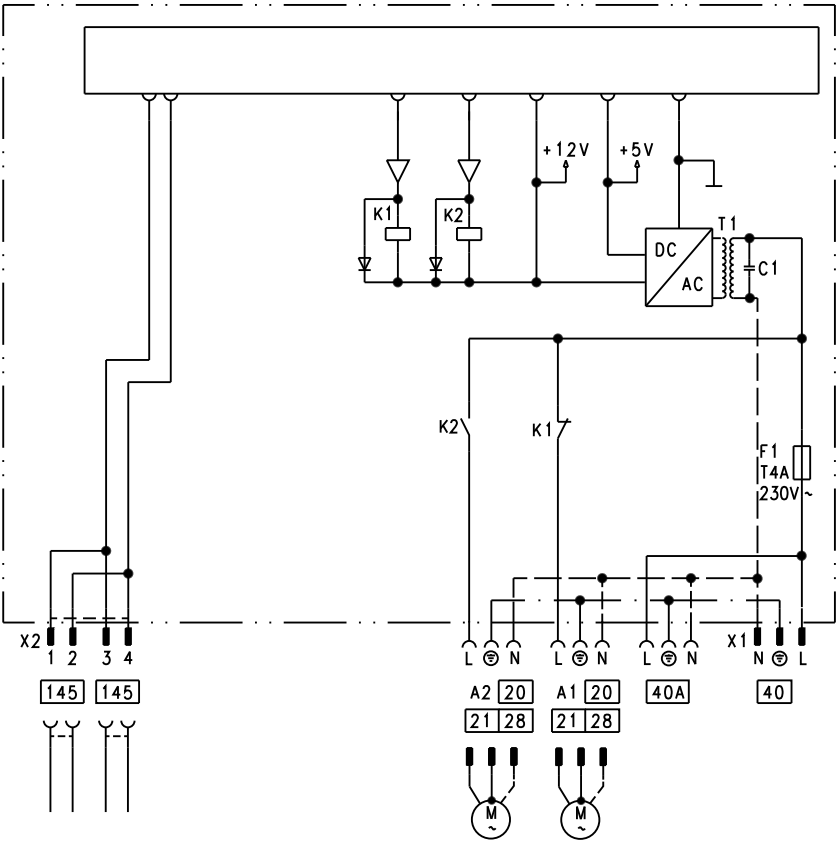

A1 Circulation pump
A2 Circulation pump
40 Power supply

40 A Power supply for additional accessories
145 KM BUS

5623 520 GB

External extensions (accessories) (cont.)

Functions

One of the following circulation pumps can be connected to each of the connections A1 and A2:

- Heating circuit pump for the heating circuit without mixer
- Circulation pump for cylinder heating
- DHW circulation pump

Select the output functions by means of the codes on the boiler control unit.

Function assignment

Function	Code ("General" group)	
	Output A1	Output A2
DHW circulation pump 28	33:0	34:0 (delivered cond.)
Heating circuit pump 20	33:1 (delivered cond.)	34:1
Circulation pump for cylinder heating 21	33:2	34:2

External extensions (accessories) (cont.)

Extension EA1

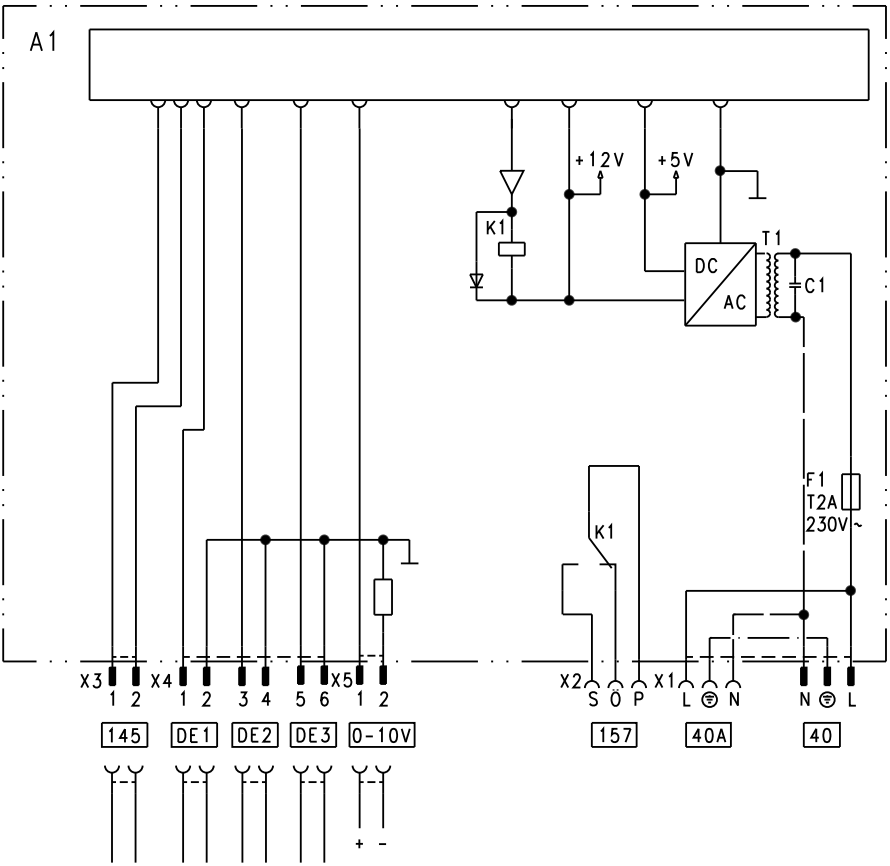

A1	PCB
F1	Fuse
DE1	Digital input 1
DE2	Digital input 2
DE3	Digital input 3
0 – 10 V	0 - 10 V input
40	Power supply
40 A	Power supply for additional accessories
157	Central fault message/feed pump/DHW circulation pump (potential-free)
145	KM BUS

5623 520 GB

External extensions (accessories) (cont.)

Digital data inputs DE1 to DE3

The following functions can be connected alternatively:
- External heating program changeover for each heating circuit
- External blocking
- External blocking with fault message input
- External demand with minimum boiler water temperature
- Fault message input
- Brief operation of the DHW circulation pump

External contacts must be floating. When connecting external contacts, observe the requirements of safety category II, i.e. 8.0 mm air and creep path or 2.0 mm insulation thickness to 'live' parts.

Input function assignment

Select the input functions by means of codes in the **"General"** group at the boiler control unit:
- DE1: Coding address 3A
- DE2: Coding address 3b
- DE3: Coding address 3C

Assigning the heating program changeover function to the heating circuits

Select the heating program changeover function for the respective heating circuit via coding address d8 in the **"Heating circuit"** group at the boiler control unit:
- Changeover via input DE1: Code d8:1
- Changeover via input DE2: Code d8:2
- Changeover via input DE3: Code d8:3

The effect of the heating program changeover is selected via coding address d5 in the **"Heating circuit"** group.
The duration of the changeover is set via coding address F2 in the **"Heating circuit"** group.

Effect of the external blocking function on the pumps

The effect on the internal circulation pump is selected in coding address 3E in the **"General"** group.
The effect on the respective heating circuit pump is selected in coding address d6 in the **"Heating circuit"** group.
The effect on a circulation pump for cylinder heating is selected in coding address 5E in the **"DHW"** group.

Effect of the external demand function on the pumps

The effect on the internal circulation pump is selected in coding address 3F in the **"General"** group.
The effect on the respective heating circuit pump is selected in coding address d7 in the **"Heating circuit"** group.
The effect on a circulation pump for cylinder heating is selected in coding address 5F in the **"DHW"** group.

DHW circulation pump runtime for brief operation

The DHW circulation pump is started by closing the contact at DE1, DE2 or DE3 by means of a pushbutton. The runtime is adjusted via coding address "3d" in the **"General"** group.

External extensions (accessories) (cont.)

Analogue input 0 - 10 V

The 0 - 10 V hook-up provides an additional set boiler water temperature:

0 - 1 V taken as "no default for set boiler water temperature"
1 V ≙ set value 10 °C
10 V ≙ set value 100 °C

Ensure DC separation between the earth conductor and the negative pole of the on-site voltage source.

Output 157

The following functions can be connected to output 157:

- Feed pump to substation
  or
- DHW circulation pump
  or
- Fault message facility

Function assignment

Select the function of output 157 via coding address "36" in the **"General"** group at the boiler control unit.

Control functions

External heating program changeover

The "External heating program changeover" function is connected via extension EA1. There are 3 inputs available at extension EA1 (DE1 to DE3).

The function is selected via the following coding addresses in the **"General"** group:

Heating program - changeover	Code
Input DE1	3A:1
Input DE2	3b:1
Input DE3	3C:1

Select the heating program changeover function for the respective heating circuit via coding address "d8" in the **"Heating circuit"** group at the boiler control unit:

Heating program - changeover	Code
Changeover via input DE1	d8:1
Changeover via input DE2	d8:2
Changeover via input DE3	d8:3

Control functions (cont.)

You can select which direction the heating program changeover takes in coding address "d5" in the **"Heating circuit"** group:

Heating program - changeover	Code
Changeover towards "Permanently reduced" or "Permanent standby" mode (subject to the selected set value)	d5:0
Changeover towards "Constant heating mode"	d5:1

The duration of the heating program changeover is set via coding address "F2" in the **"Heating circuit"** group:

Heating program - changeover	Code
No operating program changeover	F2:0
Duration of the operating program changeover 1 to 12 hours	F2:1 to F2:12

The operating program changeover stays enabled for as long as the contact remains closed, but at least as long as the duration selected in coding address "F2".

External blocking

The "External blocking" and "External blocking and fault message input" functions are connected via extension EA1. There are 3 inputs available at extension EA1 (DE1 to DE3).

The function is selected via the following coding addresses in the **"General"** group:

External blocking	Code
Input DE1	3A:3
Input DE2	3b:3
Input DE3	3C:3

Control functions (cont.)

External blocking and fault message input	Code
Input DE1	3A:4
Input DE2	3b:4
Input DE3	3C:4

The effect on the internal circulation pump is selected in coding address "3E" in the **"General"** group.

The effect on the respective heating circuit pump is selected in coding address "d6" in the **"Heating circuit"** group.

External demand

The "External demand" function is connected via extension EA1. There are 3 inputs available at extension EA1 (DE1 to DE3).

The function is selected via the following coding addresses in the **"General"** group:

External demand	Code
Input DE1	3A:2
Input DE2	3b:2
Input DE3	3C:2

The effect on the internal circulation pump is selected in coding address "3F" in the **"General"** group.
The effect on the respective heating circuit pump is selected in coding address "d7" in the **"Heating circuit"** group.

The minimum set boiler water temperature in case of external demand is selected in coding address "9b" in the **"General"** group.

Venting program

During the venting program, the circulation pump will be alternately switched on and off for 30 s respectively over a period of 20 min.

The burner is switched off during the venting program.
Activate venting program: See "Venting the heating system".

Screed drying

When activating screed drying, observe the information provided by the screed manufacturer.

Control functions (cont.)

When screed drying is activated, the heating circuit pump of the mixer circuit is switched on and the flow temperature is held in accordance with the selected profile. After completion (30 days), the mixer circuit will again be regulated automatically via the set parameters.
Observe EN 1264. The report to be provided by the heating contractor must contain the following heat-up details:

- Heat-up data with respective flow temperatures
- Max. flow temperature achieved
- Operating conditions and outside temperature during handover

The various temperature profiles can be set via coding address "F1" in the **"Heating circuit"** group.
The function continues after power failure or after the control unit has been switched off. "Heating and DHW" is started when screed drying is finished or if code "F1:0" is set manually.

Temperature profile 1: (EN 1264-4) code "F1:1"

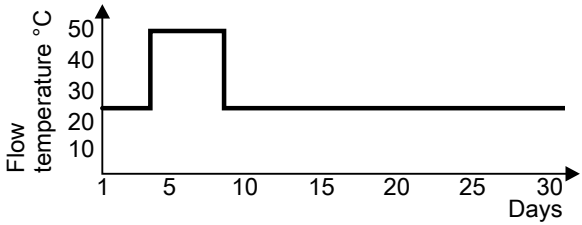

Temperature profile 2: (ZV parquet and flooring technology) code "F1:2"

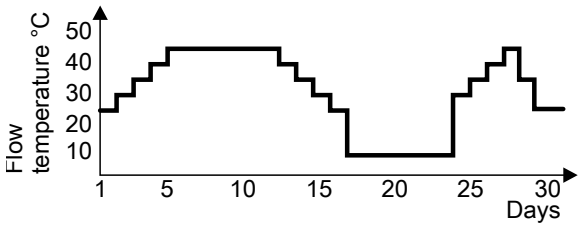

Service

5623 520 GB

Control functions (cont.)

Temperature profile 3: Code "F1:3"

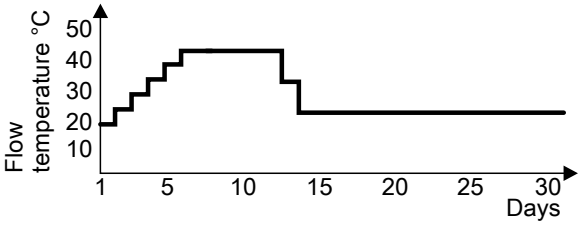

Temperature profile 4: Code "F1:4"

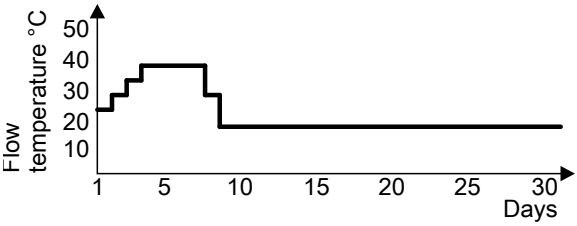

Temperature profile 5: Code "F1:5"

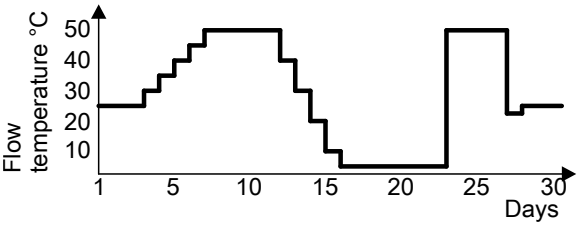

Control functions (cont.)

Temperature profile 6: Code "F1:6"

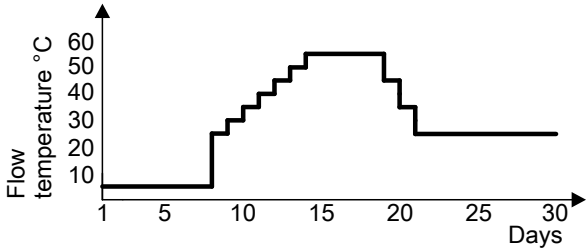

Temperature profile 7: Code "F1:15"

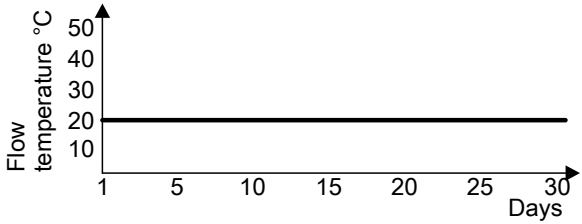

Raising the reduced room temperature

During operation with reduced room temperature, the reduced set room temperature can be automatically raised subject to the outside temperature. The temperature is raised in accordance with the selected heating curve, but no higher than the set standard room temperature.

The outside temperature limits for the start and end of temperature raising can be set in coding addresses "F8" and "F9" in the **"Heating circuit"** group.

Control functions (cont.)

Example using the settings in the delivered condition

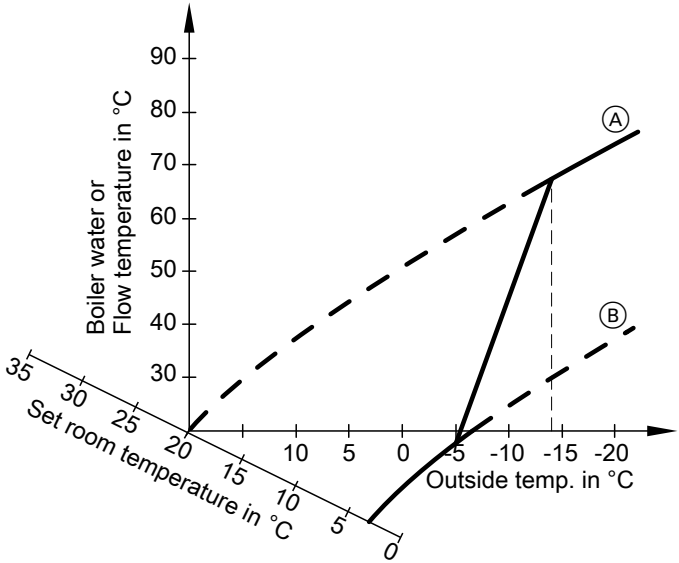

Ⓐ Heating curve for operation with standard room temperature

Ⓑ Heating curve for operation with reduced room temperature

Reducing the heat-up time

During the transition from operation with reduced room temperature to operation with standard room temperature, the boiler water or flow temperature will be raised in accordance with the selected heating curve. The boiler water or flow temperature can be automatically increased.

The value and duration of the additional increase in the set boiler water or flow temperature can be set in coding addresses "FA" and "Fb" in the **"Heating circuit"** group.

5623 520 GB

Control functions (cont.)

Example using the settings in the delivered condition

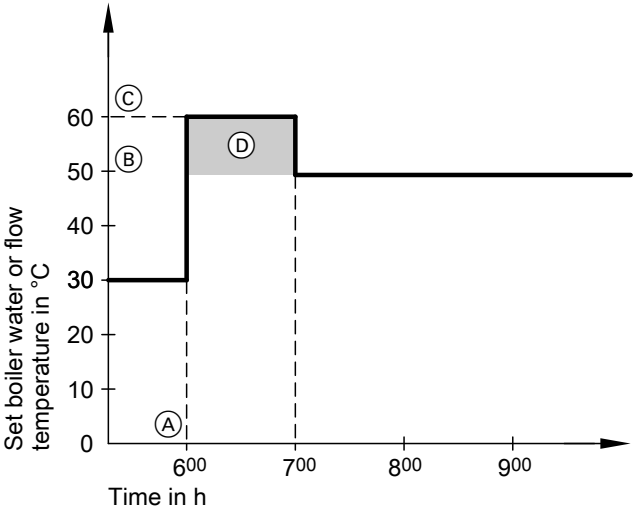

Ⓐ Start of operation with standard room temperature

Ⓑ Set boiler water or flow temperature in accordance with the selected heating curve

Ⓒ Set boiler water or flow temperature in accordance with coding address "FA":
50 °C + 20 % = 60 °C

Ⓓ Duration of operation with raised set boiler water or flow temperature in accordance with coding address "Fb":
60 min

Service

Assigning heating circuits to the remote control

The assignment of heating circuits must be configured during remote control commissioning.

Remote control affects the following heating circuit	Configuration	
	Vitotrol 200A **Vitotrol 200 RF**	**Vitotrol 300A** **Vitotrol 300 RF**
Heating circuit without mixer A1	H 1	Heating circuit 1
Heating circuit with mixer M2	H 2	Heating circuit 2
Heating circuit with mixer M3	H 3	Heating circuit 3

Note
One heating circuit can be assigned to the Vitotrol 200A and 200 RF.
Up to three heating circuits can be assigned to the Vitotrol 300A and 300 RF.
A maximum of 2 hardwired remote control units ***or*** *3 wireless remote controls may be connected to the control unit.*
If the assignment of a heating circuit is later cancelled, reset coding address "A0" in the ***"Heating circuit"*** *group for this heating circuit to 0 (fault message bC, bd, bE).*

Electronic combustion control unit

The electronic combustion controller utilises the physical correlation between the level of the ionisation current and the air ratio λ. The maximum ionisation current is achieved at an air ratio of 1 for all gas qualities.

The ionisation signal is evaluated by the combustion controller and the air ratio is adjusted to a value between λ=1.24 and 1.44. This range provides for an optimum combustion quality. Thereafter, the electronic gas valve regulates the required gas volume subject to the prevailing gas quality.

Electronic combustion control unit (cont.)

To check the combustion quality, the CO_2 content or the O_2 content of the flue gas is measured. The prevailing air ratio is determined with the measured values. The relationship between the CO_2 or O_2 content and air ratio λ is illustrated in the following table.

Air ratio λ– CO_2/O_2 content

Air ratio λ	O_2 content (%)	CO_2 content (%) for natural gas E	CO_2 content (%) for natural gas LL	CO_2 content (%) for LPG P
1.20	3.8	9.6	9.2	11.3
1.24	4.4	9.2	9.1	10.9
1.27	4.9	9.0	8.9	10.6
1.30	5.3	8.7	8.6	10.3
1.34	**5.7**	**8.5**	**8.4**	**10.0**
1.37	6.1	8.3	8.2	9.8
1.40	6.5	8.1	8.0	9.6
1.44	6.9	7.8	7.7	9.3
1.48	7.3	7.6	7.5	9.0

To achieve an optimum combustion control, the system regularly carries out an automatic self-calibration; also after a power failure (shutdown). For this, the combustion is briefly regulated to max. ionisation current (corresponding to air ratio λ=1). Automatic calibration is carried out shortly after the burner start and lasts approx. 5 s. During calibration, higher than normal CO emissions may occur briefly.

Connection and wiring diagram – internal connections

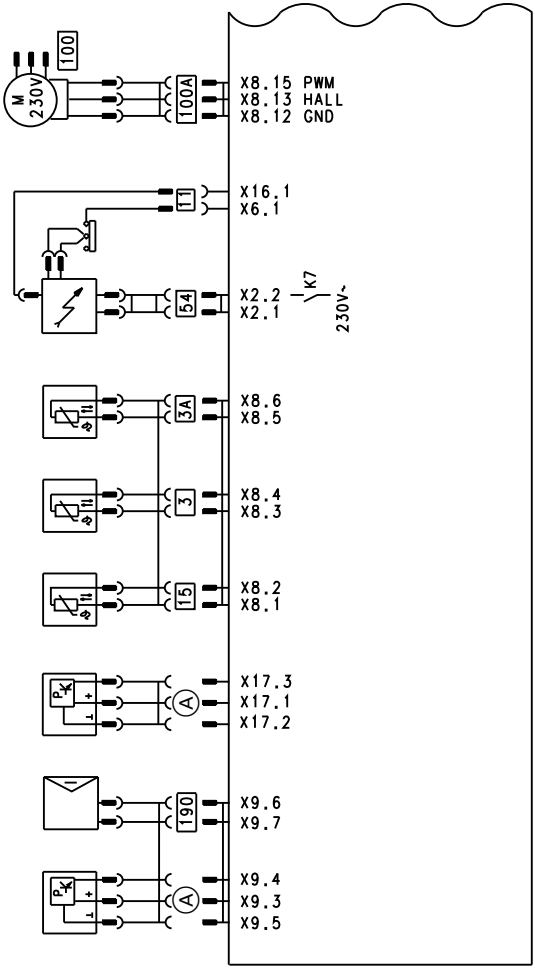

X...	Electrical interfaces	54	Ignition unit
3 (A/B)	Boiler water temperature sensor	100	Fan motor
		100 A	Fan motor control
11	Ionisation electrode	190	Modulation coil
15	Flue gas temperature sensor	Ⓐ	Flow rate sensor

5623 520 GB

Connection and wiring diagram – external connections

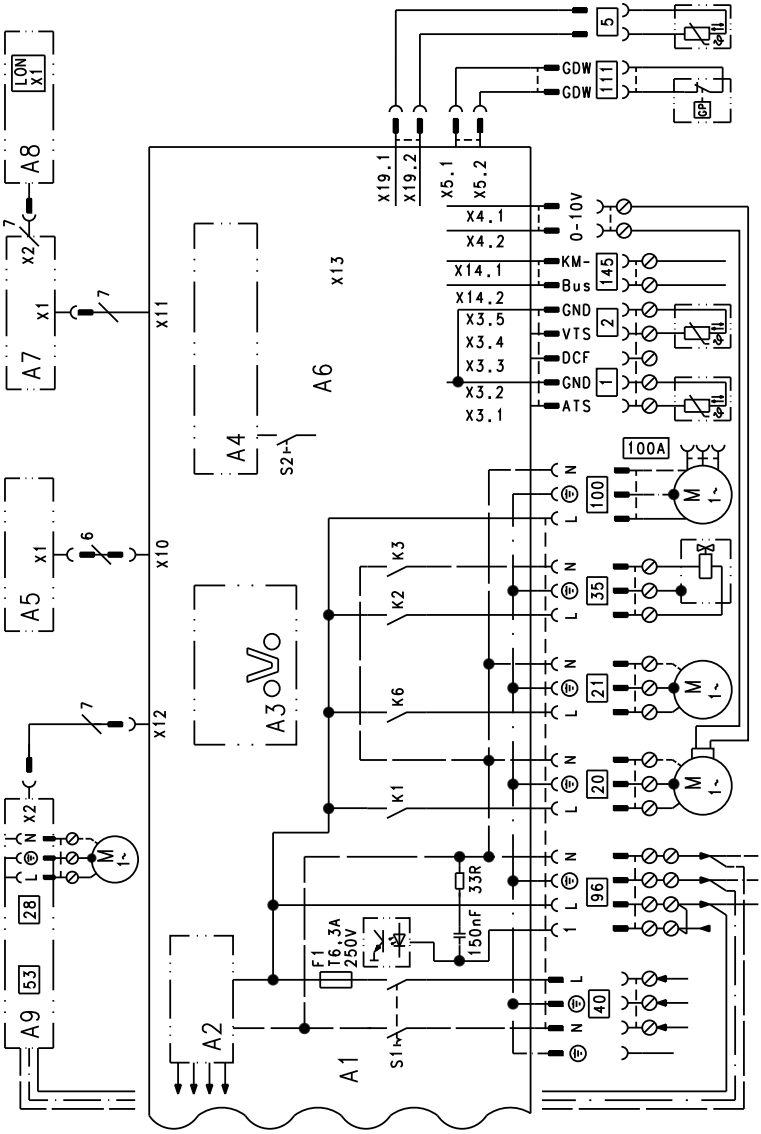

A1	Main PCB	A4	Burner control unit
A2	Power supply unit	A5	Programming unit
A3	Optolink	A6	Coding card

5623 520 GB

Service

Connection and wiring diagram – external… (cont.)

A7 Connection adaptor
A8 LON communication module or cascade communication module
A9 Internal extension (accessories)
S1 ON/OFF switch
S2 Reset button
X... Electrical interfaces
1 Outside temperature sensor
2 Flow temperature sensor, low loss header
5 Cylinder temperature sensor (plug on the cable harness)
20 Heating circuit pump or boiler circuit pump
21 Circulation pump for cylinder heating
28 DHW circulation pump
35 Gas solenoid valve
40 Power supply
96 Power supply for accessories and Vitotrol 100
100 Fan motor
111 Gas pressure switch
145 KM BUS

Ordering parts

The following information is required:

- Serial no. (see type plate Ⓐ)
- Assembly (from this parts list)
- Position number of the individual part within the assembly (from this parts list)

Standard parts are available from your local supplier.

Overview of the assemblies

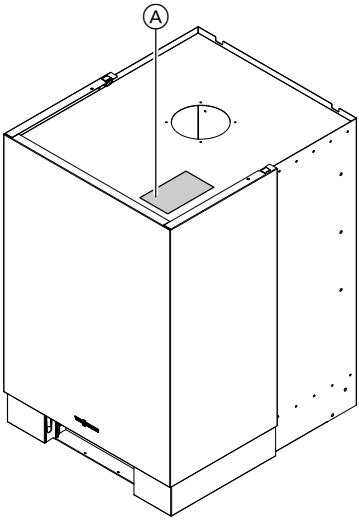

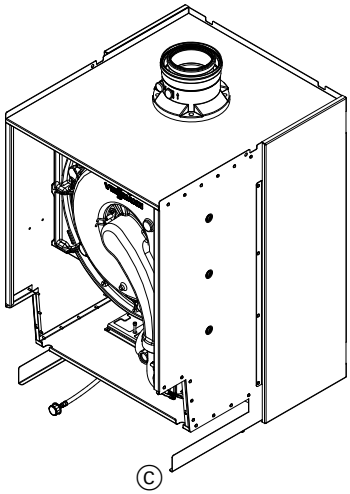

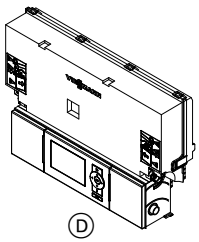

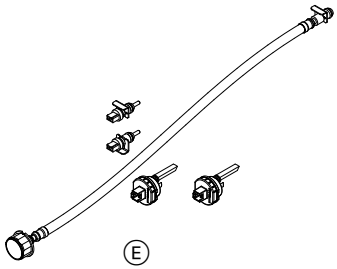

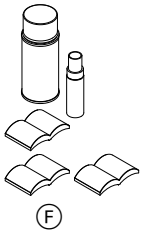

Ⓐ Type plate
Ⓑ Casing assembly
Ⓒ Heat cell assembly with burner
Ⓓ Control unit assembly

5623 520 GB

Overview of the assemblies (cont.)

Ⓔ Hydraulic assembly

Ⓕ Miscellaneous

Casing assembly

0001 Fixing clip (2 pce)
0002 Viessmann logo
0003 Safety guard
0004 Control unit support
0005 Siphon grommet
0006 Wall mounting bracket
0007 Cover panel
0008 Front panel

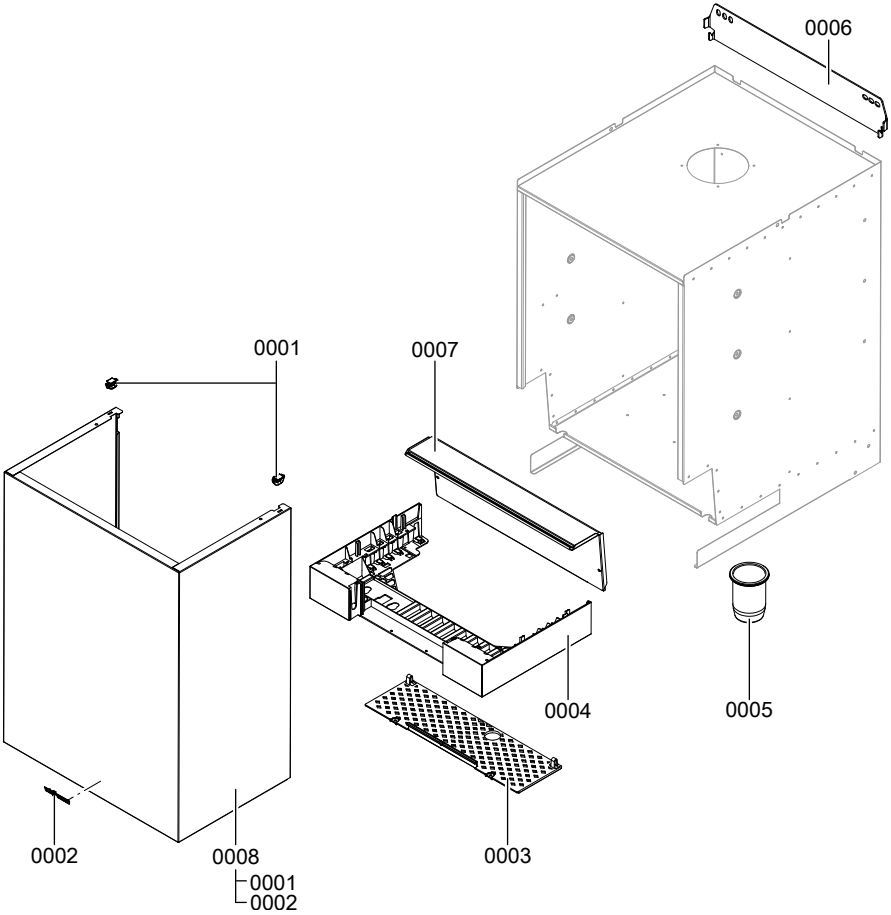

5623 520 GB

Heat cell assembly

0001 Diaphragm grommet Ø 110
0002 Lip seal Ø 150
0003 Lip seal Ø 110
0004 Boiler flue connection plug
0005 Flue gas temperature sensor
0006 Condensate hose
0007 Siphon
0008 Boiler flue connection
0009 Gas supply pipe
0010 Connection pipe
0011 Gasket G1 (5 pce)
0012 Condensate drain set
0013 Gasket G1¼ and G1½
0014 Heat exchanger with hydraulics
0015 Thermal insulation block
0016 Burner

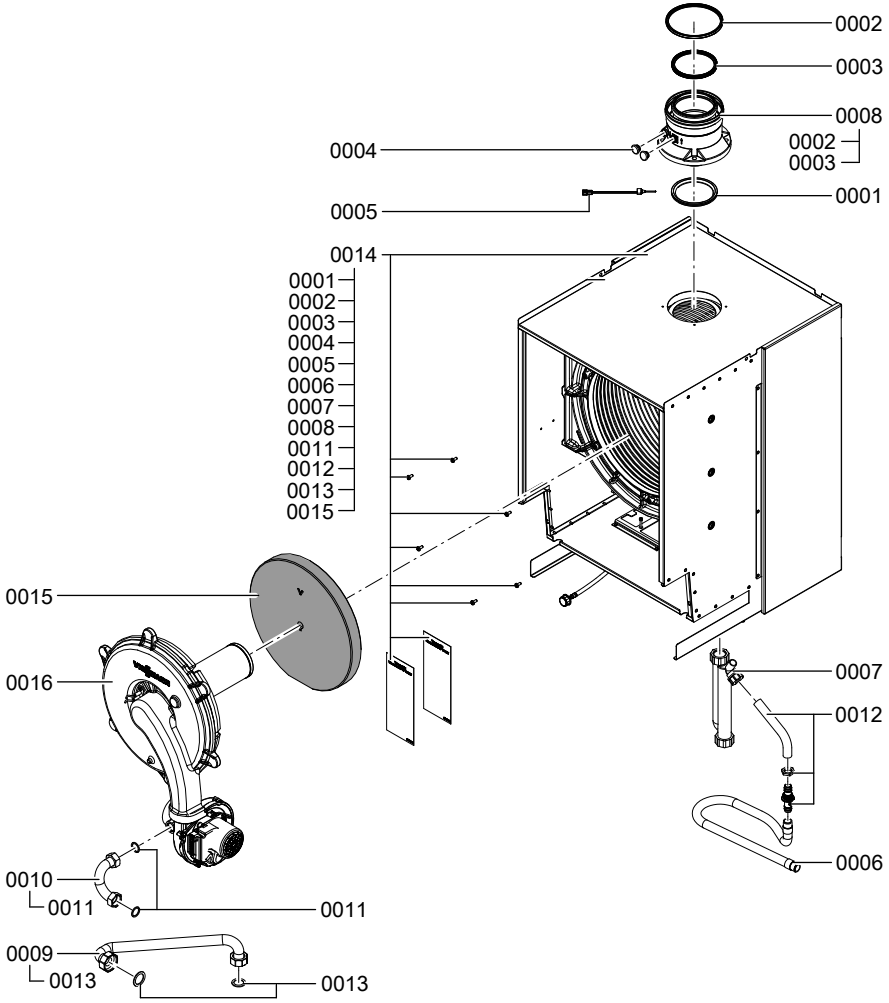

Burner assembly

0001 Ignition electrode gasket (5 pce)
0002 Gasket, ionisation electrode (5 pce)
0003 Radial fan
0004 Gas train
0005 Burner gasket
0006 Burner door
0007 Thermal insulation ring
0008 Flue gas non-return device
0009 Ionisation electrode
0010 Cylinder burner gauze assembly
0011 Adapter flange
0012 Ignition unit
0013 Ignition electrode block
0014 Burner gauze assembly gasket
0015 Door screws (set)

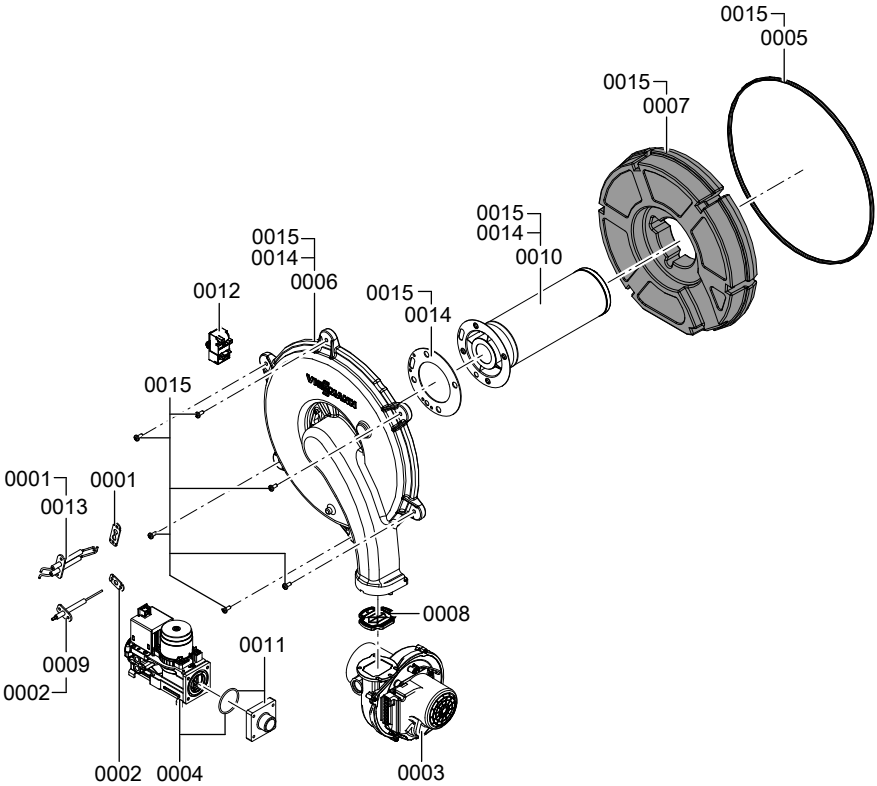

Hydraulic assembly

0001 Clip Ø 8 (5 pce)
0002 Temperature sensor (2 pce)
0003 Pressure gauge
0004 Flow sensor

Hydraulic assembly (cont.)

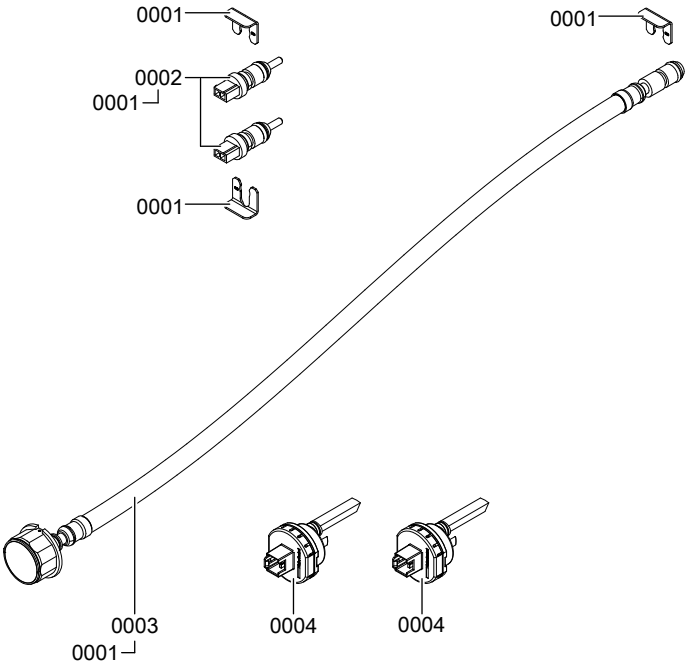

Control unit assembly

0001 Control unit
0002 Control unit casing rear panel
0003 Coding card
0004 Fuse 6.3 A slow (10 pce)
0005 Locking handle
0006 Programming unit for weather-compensated mode
0007 Programming unit for constant temperature mode
0008 LON module
0009 Adaptor PCB
0010 Cable harness X8/X9/ionisation
0011 Cable harness 100/35/54/earth
0013 Mating plug
0014 Cable fixing
0015 Locking bolts, left and right
0017 Outside temperature sensor RF
0018 Outside temperature sensor NTC
0020 Internal extension H1

Control unit assembly (cont.)

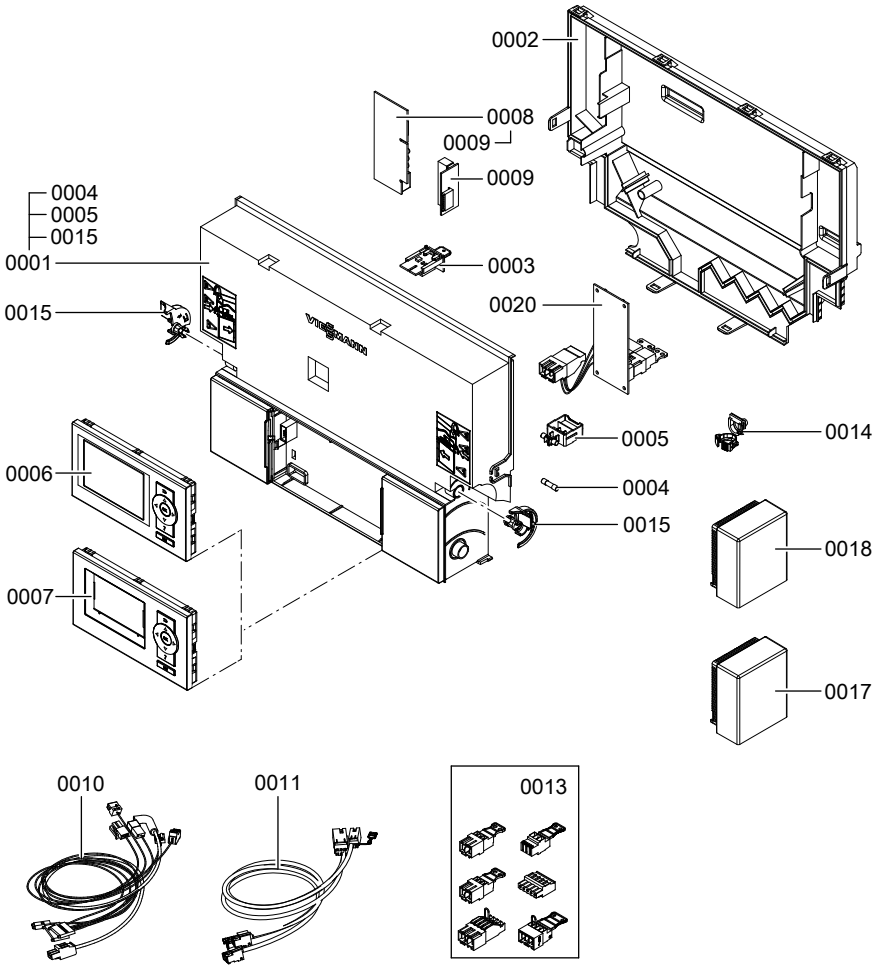

Miscellaneous

0001 Operating instructions for weather-compensated mode
0002 Operating instructions for constant temperature mode
0003 Installation and service instructions
0004 Spray paint, Vitowhite
0005 Touch-up paint stick, Vitowhite

Miscellaneous (cont.)

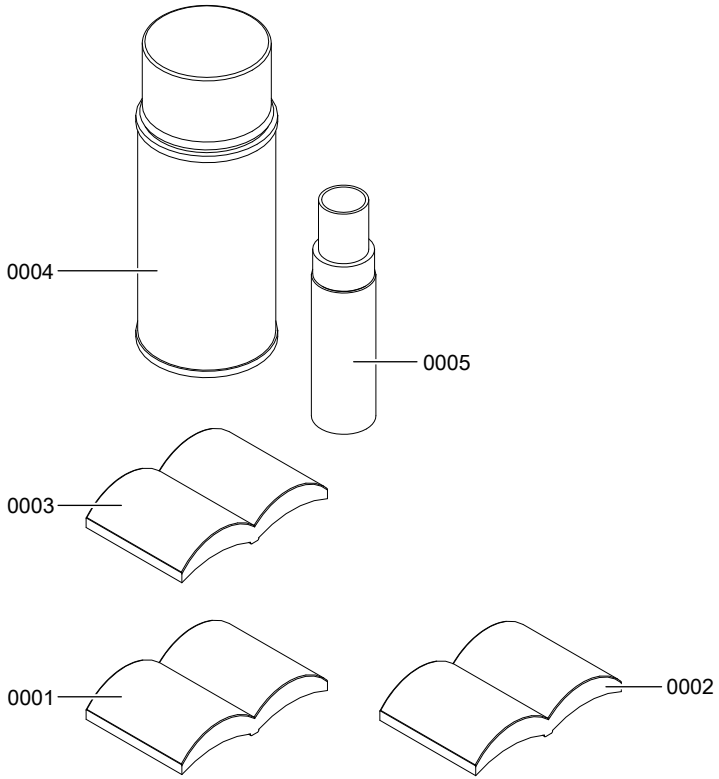

Setting and actual values		Set value	Commis-sioning	Mainte-nance/ Service
	Date Signature			
Static pressure	*mbar*	≤ 57.5		
Supply pressure (flow pres-sure)				
☐ for natural gas E	*mbar*	17.4-25		
☐ for natural gas LL	*mbar*	17.4-25		
☐ for LPG *Tick gas type*	*mbar*	42.5-57.5		
Carbon dioxide content CO_2 for natural gas				
■ At lower heating output	*% by vol.*	7.5-9.6		
■ At upper heating output	*% by vol.*	7.5-9.6		
For LPG				
■ At lower heating output	*% by vol.*	9.0-11.3		
■ At upper heating output	*% by vol.*	9.0-11.3		
Oxygen content O_2				
■ At lower heating output	*% by vol.*	3.8-7.3		
■ At upper heating output	*% by vol.*	3.8-7.3		
Carbon monoxide content CO				
■ At lower heating output	*ppm*	< 1000		
■ At upper heating output	*ppm*	< 1000		

Specification

Rated voltage:	230 V~	Electronic temperature limiter setting:	82 °C (fixed)
Rated frequency:	50 Hz	Backup fuse (power supply):	max. 16 A
Rated current:	6.0 A		
Safety category:	I		
IP rating:	IP X 4 D to EN 60529		

Permissible ambient temperature
- during operation: 0 to +40 °C
- during storage and transport: -20 to +65 °C

Gas boiler, category II $_{2N3P}$

Rated heating output range T_V/T_R 50/30 °C	**kW**	**32 - 125**	**32 - 150**
Rated heat input range	kW	30 - 118	30 - 142
Power consumption in the delivered condition	W	146	222
Connection values relative to the max. load With			
Natural gas E	m^3/h	12.49	15.03
Natural gas LL	m^3/h	14.51	17.47
LPG	kg/h	9.23	11.10
Product ID		CE-0085CN0050	

Note
The connection values are only for documentation purposes (e.g. in the gas contract application) or to estimate a supplementary volumetric settings check. Due to the factory settings, the gas pressure must not be altered from these values. Reference: 15°C, 1013 mbar.

Declaration of conformity

Declaration of Conformity for the Vitodens 200-W

We, Viessmann Werke GmbH & Co KG, D-35107 Allendorf, confirm as sole responsible body that the product **Vitodens 200-W** complies with the following standards:

EN 15417
EN 15420
EN 806
EN 55 014
EN 60 335-1
EN 60 335-2-102
EN 61 000-3-2
EN 61 000-3-3
EN 62 233

In accordance with the following Directives, this product is designated with **CE-0085**:

92/42/EEC
2004/108/EC
2006/95/EC
2009/142/EC

This product meets the requirements of the Efficiency Directive (92/42/EEC) for **condensing boilers**.

Allendorf, 01 June 2012

Viessmann Werke GmbH&Co KG

Authorised signatory Manfred Sommer

Manufacturer's certificate according to the 1st BImSchV [Germany]

We, Viessmann Werke GmbH & Co KG, D-35107 Allendorf, confirm that the product **Vitodens 200-W** complies with the NO_x limits specified by the 1st BImSchV paragraph 6 [Germany].

Allendorf, 01 June 2012

Viessmann Werke GmbH&Co KG

Authorised signatory Manfred Sommer

Keyword index

Keyword index (cont.)

Applicability

These service instructions apply for appliances with the following serial numbers (see type plate):
7506550 7506551

Viessmann Werke GmbH&Co KG
D-35107 Allendorf
Telephone: +49 6452 70-0
Fax: +49 6452 70-2780
www.viessmann.com

Viessmann Limited
Hortonwood 30, Telford
Shropshire, TF1 7YP, GB
Telephone: +44 1952 675000
Fax: +44 1952 675040
E-mail: info-uk@viessmann.com

5623 520 GB Subject to technical modifications.